REV	DESCRIPTION	DRAWN	DATE
		APPROVED	DATE

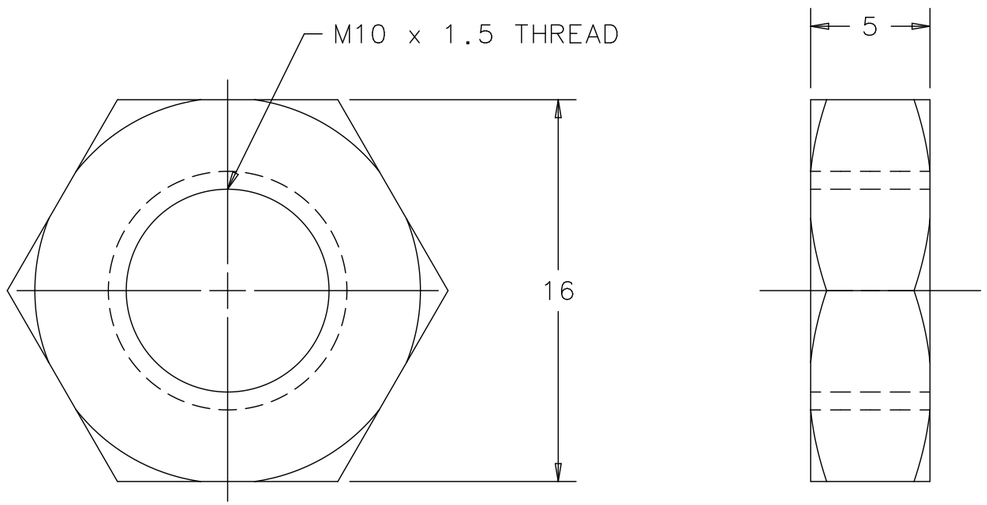

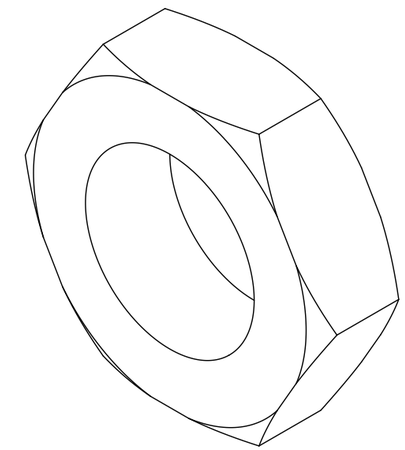

NOTE:
PART CAN BE PURCHASED WITH ANODIZE 7075-T73 ALUMINUM AS THE MATERIAL OR, IF MACHINED, AFTER MACHINING HARDCOAT ANODIZE TYPE III CLASS 1 TO 0.025mm - 0.05mm TOTAL LAYER THICKNESS FOLLOWED BY MID-TEP NICKEL ACETATE SEAL.

UNLESS OTHERWISE SPECIFIED			ORIGINATOR	M.MCGEE	30-OCT-2012
METRIC	X.X	ANGLES	DRAWN	R.STEWART	30-OCT-2012
± 0.25	± 0.1	± .5°	CHECKED	M.MCGEE	30-NOV-2012
1. BREAK ALL SHARP EDGES 0.4 MAX. 2. DO NOT SCALE DRAWING. 3. DIMENSIONS BASED UPON ASME Y14.5M-1994 4. MAX. ALL MACH. SURFACES 1.6 5. DRAWING UNITS: METRIC			APPROVED	M.MCGEE	30-NOV-2012
			USED ON	MD-433904 ME-433925	
			MATERIAL	7075-T73 ALUMINUM	

FERMI NATIONAL ACCELERATOR LABORATORY
UNITED STATES DEPARTMENT OF ENERGY

NOVA-ANU TARGET HALL
MEDIUM ENERGY TARGET MARK II
M10 JAM HEX NUT

SCALE	DRAWING NUMBER	SHEET	REV
4:1	8875.112-MB-433926	1 OF 1	

CREATED WITH : Ideas12NXSeries GROUP: ACCELERATOR MECH. SUPPT.

Created: 13:59:51 on 05-02-13 (D-M-Y) By: rstewart State: 3-RELEASED