REV	DESCRIPTION	DRAWN	DATE
		APPROVED	DATE
A	NOTE CHANGED	R.STEWART	20-MAY-2013
		M.MCGEE	20-MAY-2013

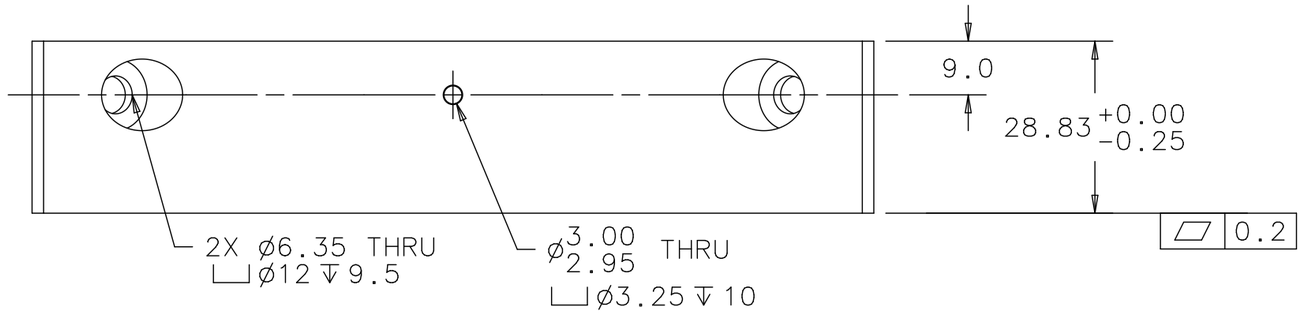

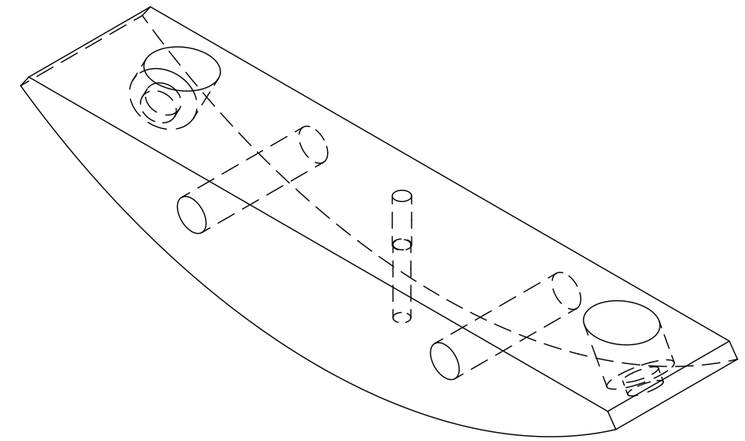

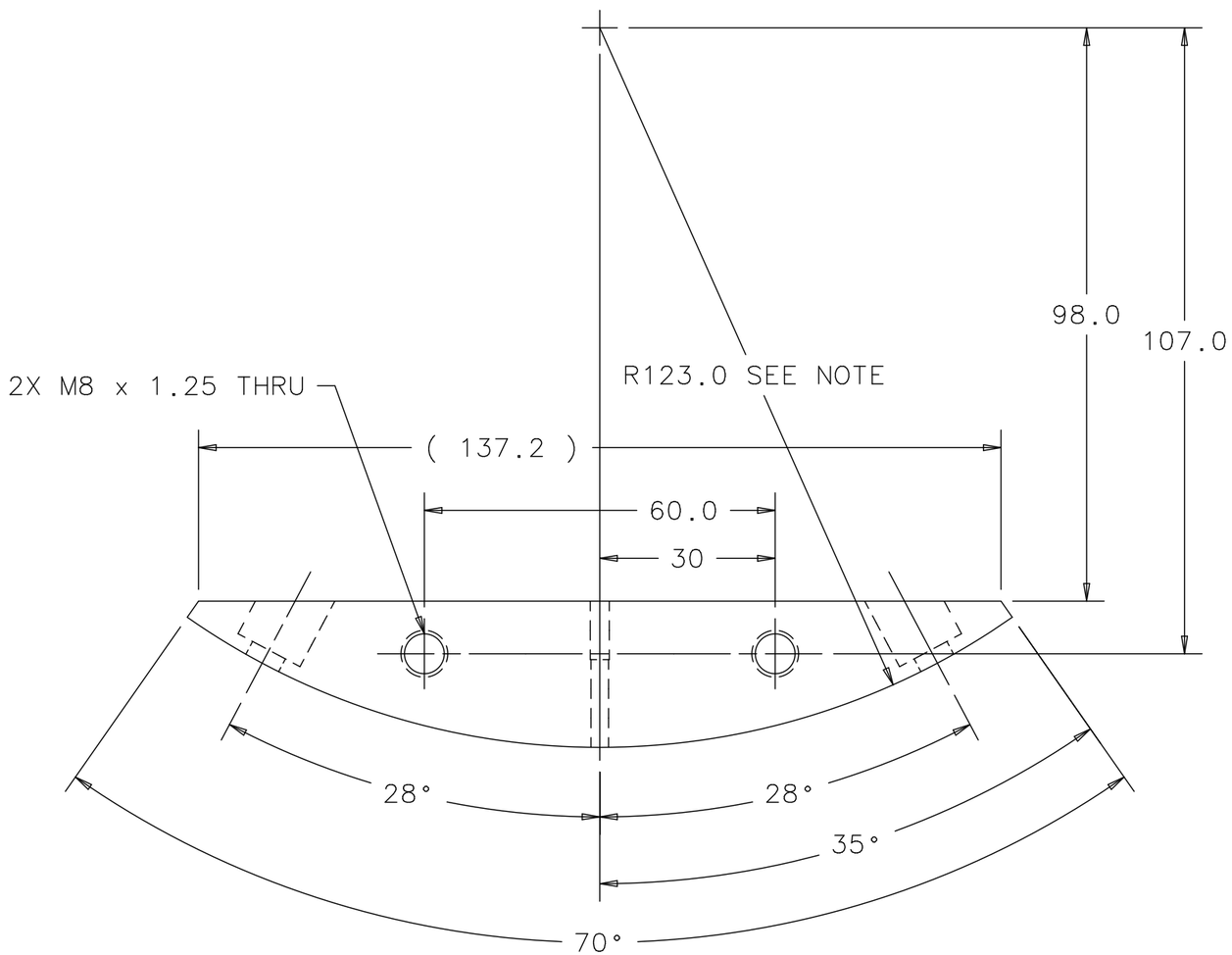

NOTE: RADIUS TO BE MACHINED WITH
ID OF INNER TUBE (ME 433920)

UNLESS OTHERWISE SPECIFIED			ORIGINATOR	M.MCGEE	18-OCT-2012
METRIC	X.X	ANGLES	DRAWN	R.STEWART	18-OCT-2012
± 0.2	± 0.1	± .25°	CHECKED	M.MCGEE	30-NOV-2012
			APPROVED	M.MCGEE	30-NOV-2012

1. BREAK ALL SHARP EDGES 0.4 MAX.
2. DO NOT SCALE DRAWING.
3. DIMENSIONS BASED UPON ASME Y14.5M-1994
4. MAX. ALL MACH. SURFACES 1.6
5. DRAWING UNITS: METRIC

USED ON: ME-433923

MATERIAL: 6061-T651 ALUMINUM

FERMI NATIONAL ACCELERATOR LABORATORY
UNITED STATES DEPARTMENT OF ENERGY

NOVA-ANU TARGET HALL MEDIUM ENERGY TARGET MARK II CASING RAIL MOUNT

SCALE	DRAWING NUMBER	SHEET	REV
1:1	8875.112-MB-433924	1 OF 1	A

CREATED WITH : Ideas12NXSeries GROUP: ACCELERATOR MECH. SUPPT.

Created: 14:30:42 on 20-05-13 (D-M-Y) By: rstewart State: 3-RELEASED