REV	DESCRIPTION	DRAWN	DATE
		APPROVED	DATE

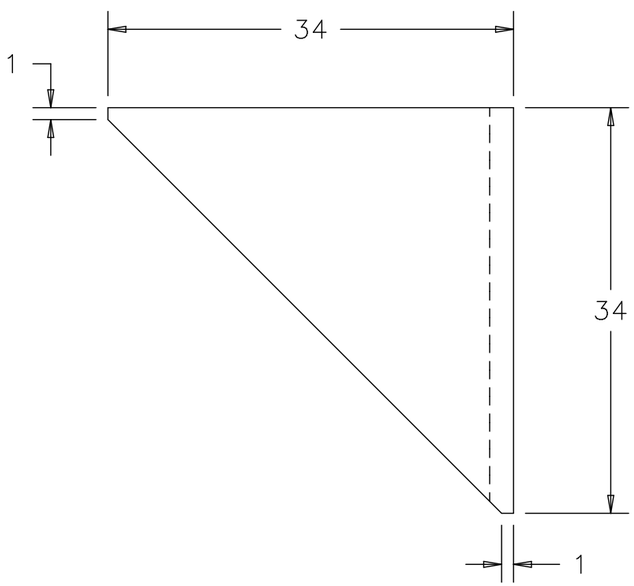

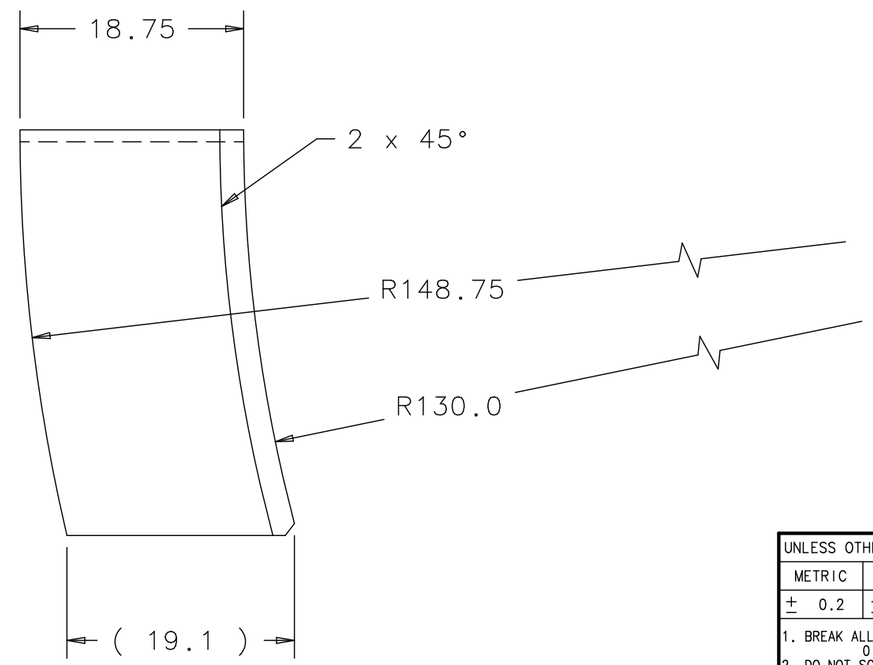

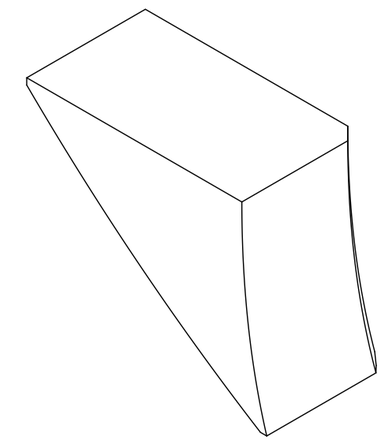

UNLESS OTHERWISE SPECIFIED			ORIGINATOR	M.MCGEE	18-OCT-2012
METRIC	X.X	ANGLES	DRAWN	R.STEWART	18-OCT-2012
± 0.2	± 0.1	± .25°	CHECKED	M.MCGEE	30-NOV-2012
			APPROVED	M.MCGEE	30-NOV-2012

1. BREAK ALL SHARP EDGES 0.4 MAX.
2. DO NOT SCALE DRAWING.
3. DIMENSIONS BASED UPON ASME Y14.5M-1994
4. MAX. ALL MACH. SURFACES 1.6
5. DRAWING UNITS: METRIC

USED ON: ME-433919

MATERIAL: SEE PARTS LIST ABOVE

FERMI NATIONAL ACCELERATOR LABORATORY
UNITED STATES DEPARTMENT OF ENERGY

NOVA-ANU TARGET HALL
MEDIUM ENERGY TARGET MARK II
INNER TUBE DAM

SCALE	DRAWING NUMBER	SHEET	REV
2:1	8875.112-MB-433922	1 OF 1	

CREATED WITH : Ideas12NXSeries | GROUP: ACCELERATOR MECH. SUPPT.

Created: 13:57:20 on 05-02-13 (D-M-Y) By: rstewart State: 3-RELEASED