| REV | DESCRIPTION | DRAWN | DATE |
|---|---|---|---|
| | | APPROVED | DATE |
| A | 3MM RADIUS ADDED | R.STEWART | 27-AUG-2013 |
| | | M.MCGEE | 27-AUG-2013 |

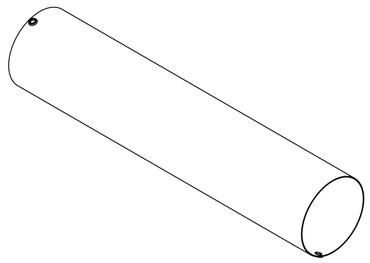

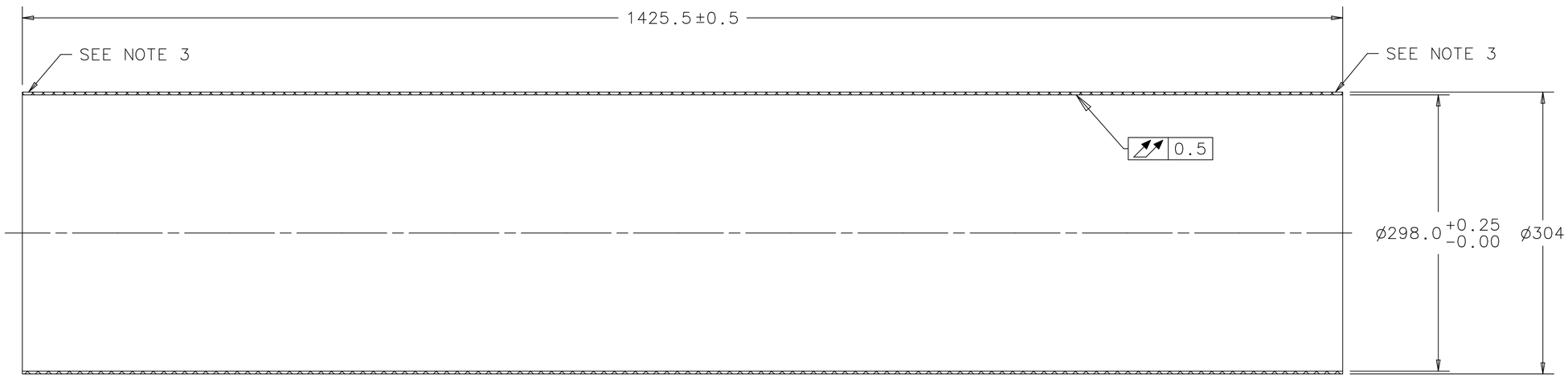


SECTION B-B
SCALE 1:4

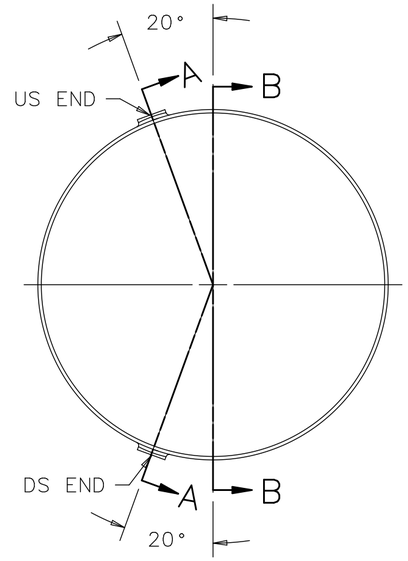


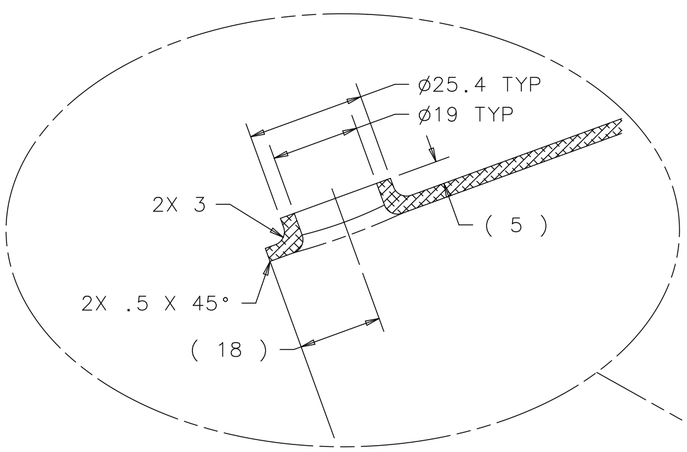


TYPICAL PORT VIEW
SCALE 1:1

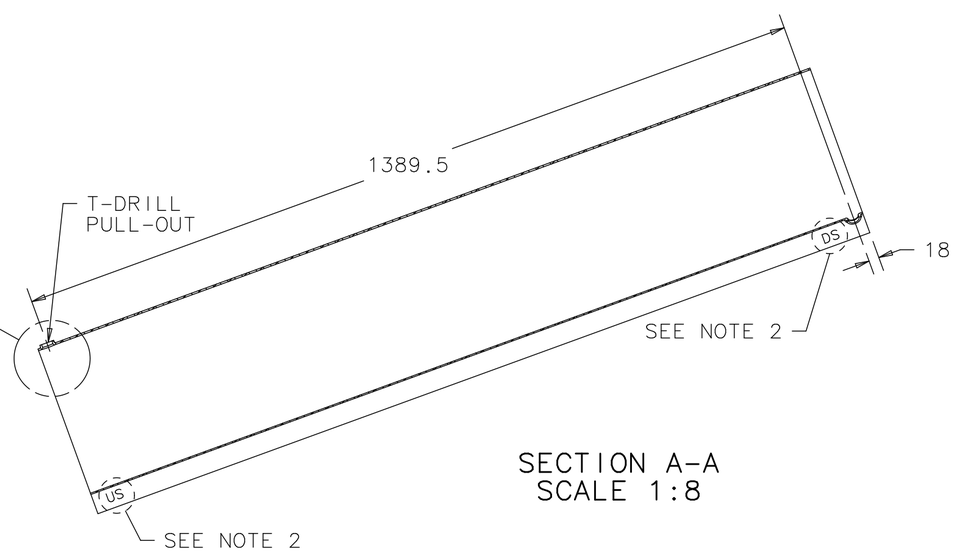


SECTION A-A
SCALE 1:8

NOTES: 1. T-DRILL PULL-OUTS TO BE DONE BEFORE TUBE IS TO BE CUT TO MACHINED LENGTH
2. VIBRO ETCH (US AND DS) ON TUBE SURFACE AS SHOWN
3. VIBRO ETCH 10mm LONG SCRIBE LINES ON THE OD SURFACE OF THE TUBE AT THE 90° POSITION ON THE UPSTREAM AND DOWNSTREAM ENDS

| UNLESS OTHERWISE SPECIFIED | | | ORIGINATOR | M.MCGEE | 17-OCT-2012 |
|---|---|---|---|---|---|
| .XX | X.X | ANGLES | DRAWN | R.STEWART | 17-OCT-2012 |
| ± 0.35 | ± 0.05 | ± .5° | CHECKED | M.MCGEE | 30-NOV-2012 |
| 1. BREAK ALL SHARP EDGES .04 MAX. 2. DO NOT SCALE DRAWING. 3. DIMENSIONS BASED UPON ASME Y14.5M-1994 4. MAX. ALL MACH. SURFACES 1.6 5. DRAWING UNITS: METRIC | | | APPROVED | M.MCGEE | 30-NOV-2012 |
| | | | USED ON | ME-433919 | |
| | | | MATERIAL | 6061-T651 ALUMINUM | |

FERMI NATIONAL ACCELERATOR LABORATORY
UNITED STATES DEPARTMENT OF ENERGY

# NOVA-ANU TARGET HALL MEDIUM ENERGY TARGET MARK II OUTER CASING

| SCALE | DRAWING NUMBER | SHEET | REV |
|---|---|---|---|
| 1:4 | 8875.112-MC-433921 | 1 OF 1 | A |

CREATED WITH : Ideas12NXSeries GROUP: ACCELERATOR MECH. SUPPT.