REV	DESCRIPTION	DRAWN / APPROVED	DATE / DATE
A	ITEM 1 UPDATED	R.STEWART	04-SEP-2013
		M.MCGEE	04-SEP-2013

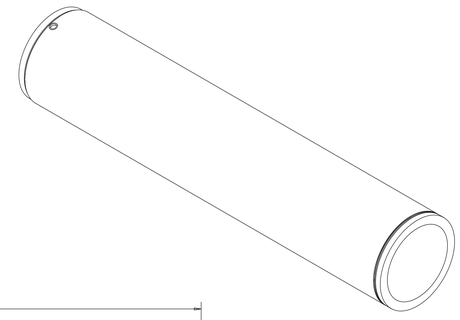

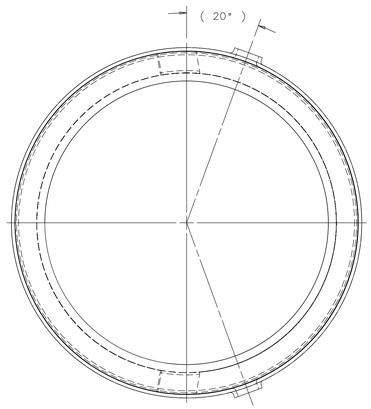

UPSTREAM END
SCALE 1:2

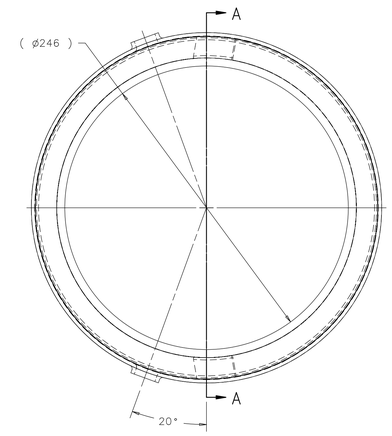

DOWNSTREAM END
SCALE 1:2

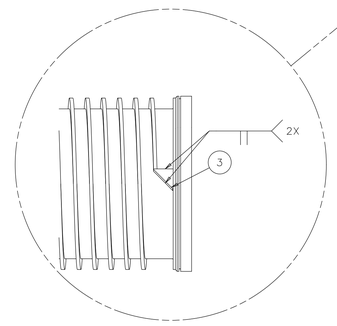

SECTION DETAIL VIEW
SCALE 1:4

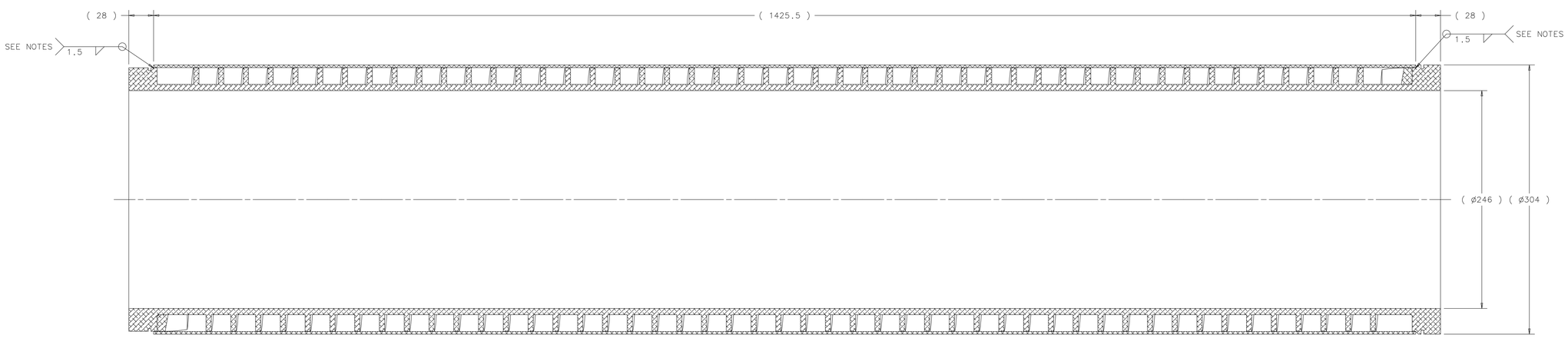

SECTION A-A
SCALE 1:2

ITEM	PART NO.	DESCRIPTION OR SIZE	QTY.
3	MB-433922	INNER TUBE DAM	2
2	MC-433921	OUTER CASING	1
1	ME-433920	INNER TUBE	1

PARTS LIST

UNLESS OTHERWISE SPECIFIED					
METRIC	X.X	ANGLES	ORIGINATOR	M.MCGEE	18-OCT-2012
± 0.35	± 0.1	± .5°	DRAWN	R.STEWART	18-OCT-2012
			CHECKED	M.MCGEE	30-NOV-2012
			APPROVED	M.MCGEE	30-NOV-2012

1. BREAK ALL SHARP EDGES 0.4 MAX.
2. DO NOT SCALE DRAWING.
3. DIMENSIONS BASED UPON ASME Y14.5M-1994
4. MAX. ALL MACH. SURFACES 1.6
5. DRAWING UNITS: METRIC

USED ON: ME-433923

MATERIAL: SEE PARTS LIST ABOVE

FERMI NATIONAL ACCELERATOR LABORATORY
UNITED STATES DEPARTMENT OF ENERGY

NOVA-ANU TARGET HALL MEDIUM ENERGY TARGET MARK II CASING WELDMENT

SCALE	DRAWING NUMBER	SHEET	REV
1:4	8875.112-ME-433919	1 OF 1	A

CREATED WITH : Ideas12NXSeries | GROUP: ACCELERATOR MECH. SUPPT.

NOTES: 1. USE WELDING ROD ER4043 OR EQUAL FOR ALL WELDING.
2. ALL WELDS TO BE LEAK TESTED AS REQUIRED BY MSD ENGINEERING SPECIFICATION 1320.000-ES-296471