REV	DESCRIPTION	DRAWN	DATE
		APPROVED	DATE
A	CHAMFER WAS 1.0 RADIUS	R.STEWART	19-FEB-2013
		M.MCGEE	19-FEB-2013

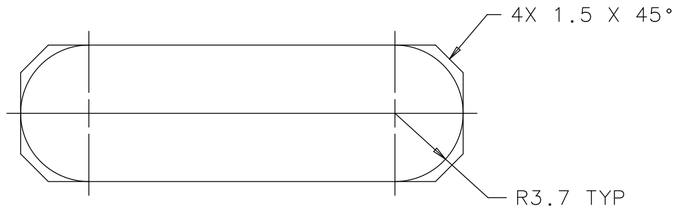

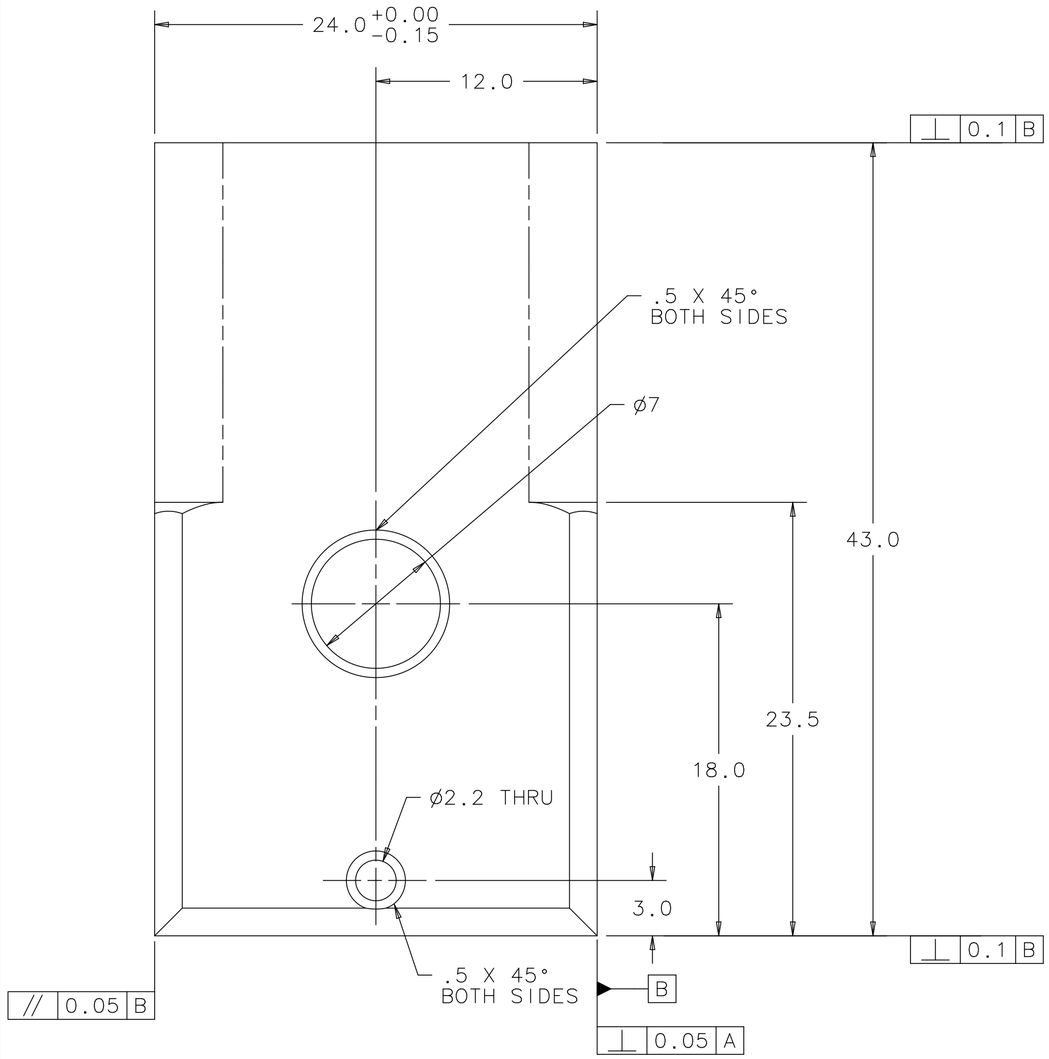

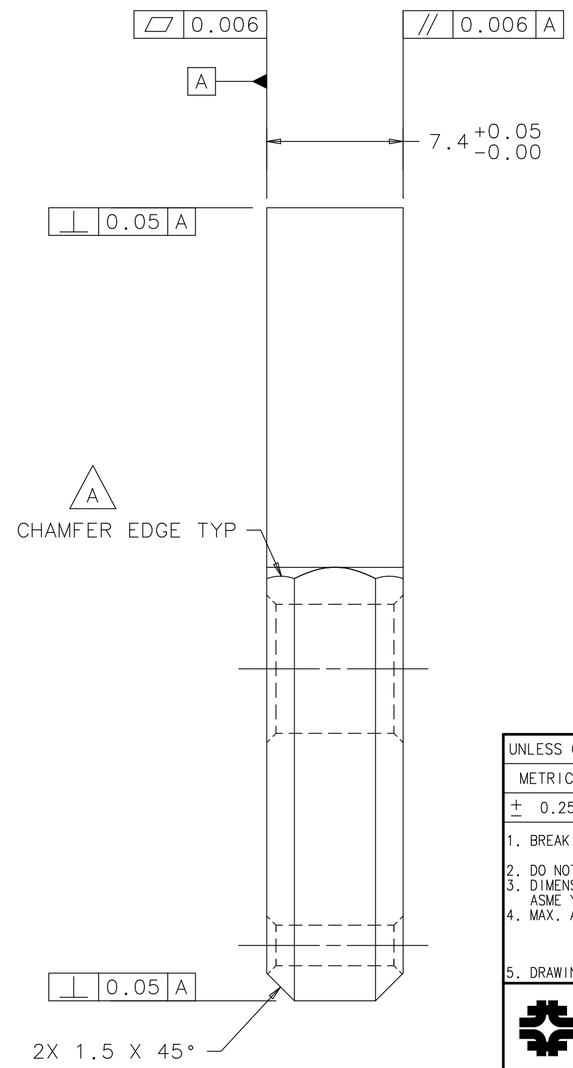

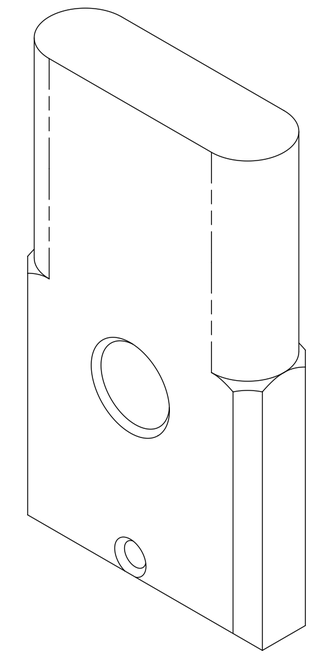

UNLESS OTHERWISE SPECIFIED			ORIGINATOR	M.MCGEE	04-OCT-2012
METRIC	X.X	ANGLES	DRAWN	R.STEWART	04-OCT-2012
± 0.25	± 0.1	± .5°	CHECKED	M.MCGEE	30-NOV-2012
			APPROVED	M.MCGEE	30-NOV-2012

1. BREAK ALL SHARP EDGES 0.4 MAX.
2. DO NOT SCALE DRAWING.
3. DIMENSIONS BASED UPON ASME Y14.5M-1994
4. MAX. ALL MACH. SURFACES √
5. DRAWING UNITS: METRIC

USED ON: MD-433916

MATERIAL: POCO ZXF-5Q GRAPHITE

FERMI NATIONAL ACCELERATOR LABORATORY
UNITED STATES DEPARTMENT OF ENERGY

NOVA-ANU TARGET HALL
MEDIUM ENERGY TARGET MARK II
VERTICAL BUDAL TARGET FIN

SCALE	DRAWING NUMBER	SHEET	REV
3:1	8875.112-MC-433918	1 OF 1	A

CREATED WITH : Ideas12NXSeries | GROUP: ACCELERATOR MECH. SUPPT.