REV	DESCRIPTION	DRAWN	DATE
		APPROVED	DATE
A	ADDED LIMIT DIMENSION, REMOVED NOTE	R.STEWART	02-APR-2013
		M.MCGEE	02-APR-2013

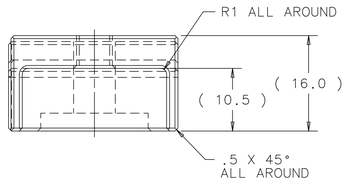

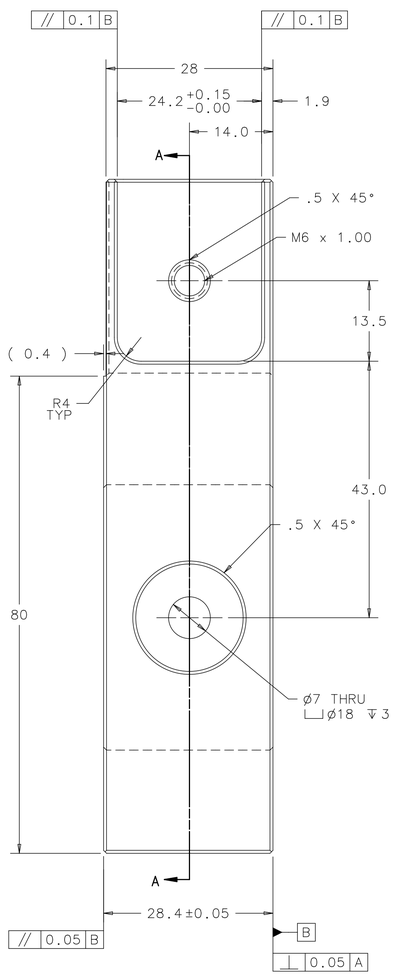

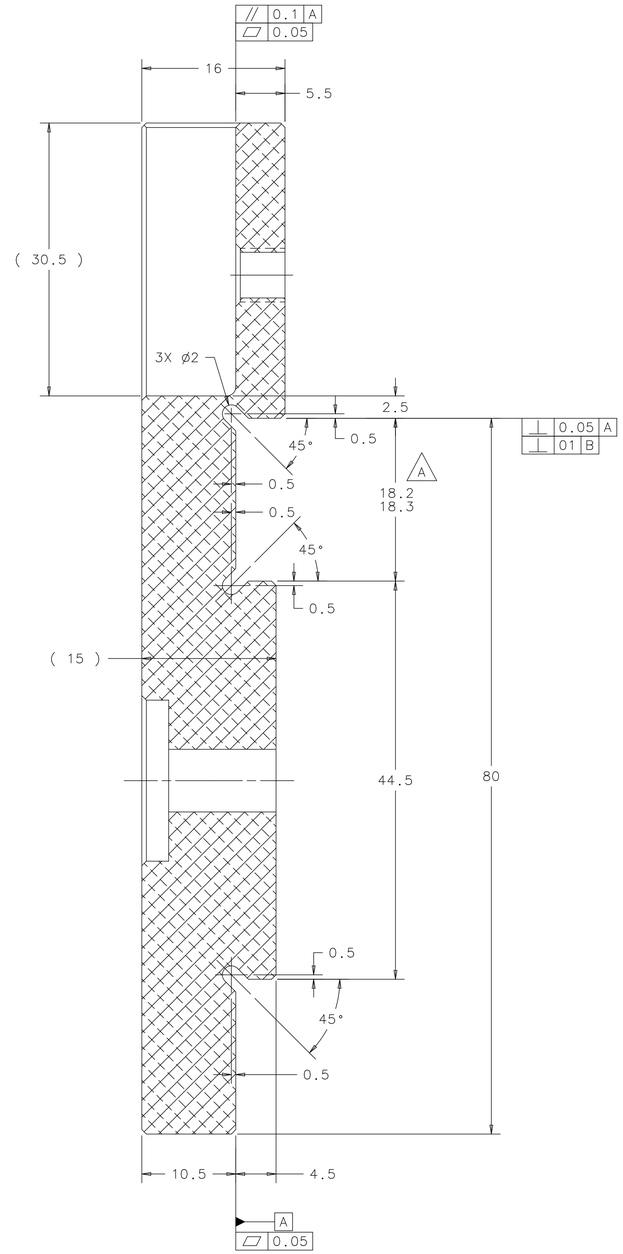

SECTION A-A
SCALE 3:1

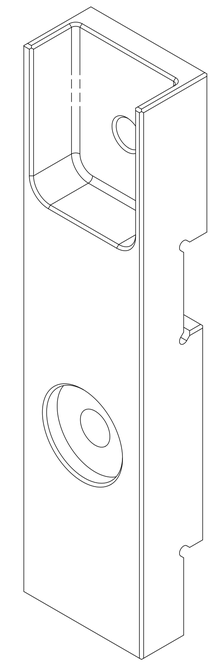

A

NOTES: 1. HARDCOAT ANODIZE TYPE III CLASS 1 TO 0.025mm - 0.05mm TOTAL LAYER THICKNESS FOLLOWED BY MID-TEMP NICKEL ACETATE SEAL.

UNLESS OTHERWISE SPECIFIED			ORIGINATOR	M.MCGEE	04-OCT-2012
METRIC	X.X	ANGLES	DRAWN	R.STEWART	04-OCT-2012
± 0.25	± 0.1	± .5°	CHECKED	M.MCGEE	30-NOV-2012
1. BREAK ALL SHARP EDGES 0.4 MAX. 2. DO NOT SCALE DRAWING. 3. DIMENSIONS BASED UPON ASME Y14.5M-1994 4. MAX. ALL MACH. SURFACES 1.6 5. DRAWING UNITS: METRIC			APPROVED	M.MCGEE	30-NOV-2012
			USED ON	MD-433913	
			MATERIAL	6061-T651 ALUMINUM	

FERMI NATIONAL ACCELERATOR LABORATORY
UNITED STATES DEPARTMENT OF ENERGY

NOVA-ANU TARGET HALL
MEDIUM ENERGY TARGET MARK II
HORIZONTAL BUDAL FIN BRACKET

SCALE	DRAWING NUMBER	SHEET	REV
2:1	8875.112-MD-433914	1 OF 1	A

CREATED WITH : Ideas12NXSeries GROUP: ACCELERATOR MECH. SUPPT.