REV	DESCRIPTION	DRAWN	DATE
		APPROVED	DATE

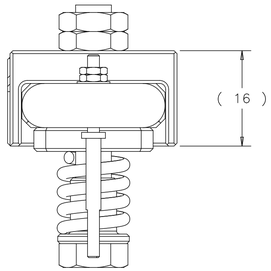

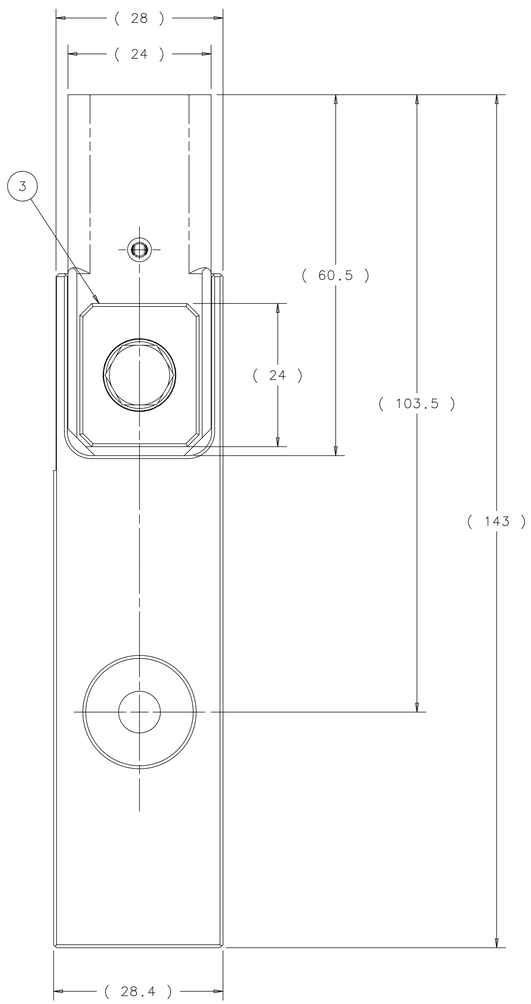

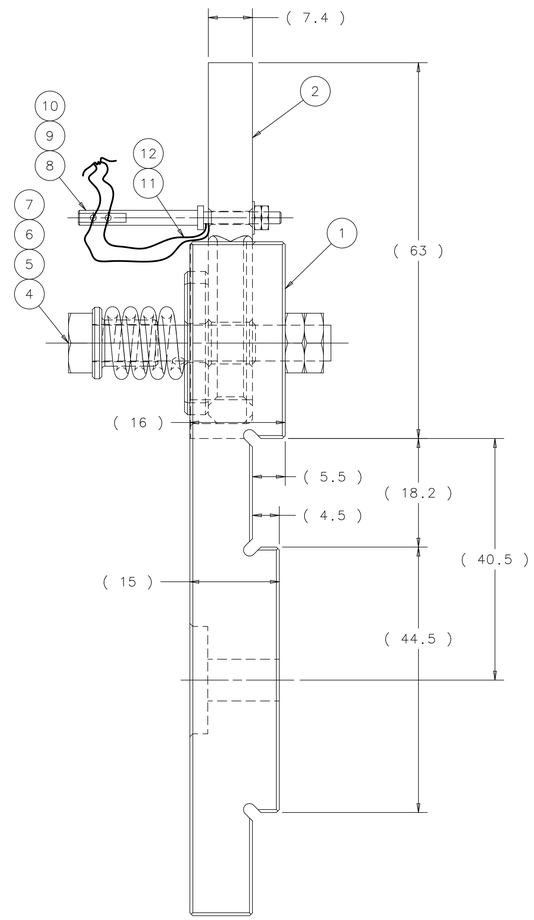

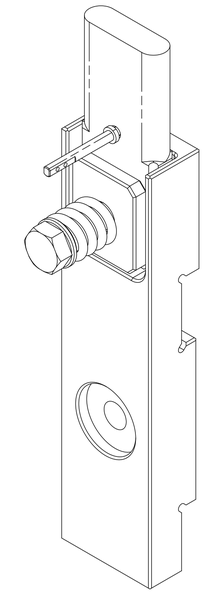

ITEM	PART NO.	DESCRIPTION OR SIZE	QTY.
12		ø0.8mm 316L WELD WIRE	
11		COPPER TIN PLATED TERMINAL LUG	4
10	MB-433927	M2 FLAT WASHER ANODIZED 7075-T73 ALUMINUM	1
9	MB-433928	M2 x 0.40 HEX NUT ANODIZED 7075-T73 ALUMINUM	2
8	MB-433912	BUDAL CONNECTION ROD	1
7	MB-433935	M6 x 1.00 HEX JAM NUT ANODIZED 7075-T73 ALUMINUM	2
6		ø12.2 O.D. COMPRESSION SPRING SS LEE SPRINGS P/N LC 080G 03 S	1
5	MC-433799	BUDAL SPRING CENTERING WASHER	1
4	MB-433930	M6 x 1.00 X 40 LONG HHCS ANODIZED 7075-T73 ALUMINUM	1
3	MB-433747	BUDAL FIN PRESSING PLATE	1
2	MB-433915	HORIZONTAL BUDAL TARGET FIN	1
1	MD-433914	HORIZONTAL BUDAL FIN BRACKET	1

PARTS LIST

UNLESS OTHERWISE SPECIFIED			ORIGINATOR	M.MCGEE	04-OCT-2012
METRIC	X.X	ANGLES	DRAWN	R.STEWART	04-OCT-2012
± 0.25	± 0.1	± .5°	CHECKED	M.MCGEE	30-NOV-2012
			APPROVED	M.MCGEE	30-NOV-2012

1. BREAK ALL SHARP EDGES 0.4 MAX.
2. DO NOT SCALE DRAWING.
3. DIMENSIONS BASED UPON ASME Y14.5M-1994
4. MAX. ALL MACH. SURFACES 1.6
5. DRAWING UNITS: METRIC

USED ON: ME-433907

MATERIAL: SEE PARTS LIST ABOVE

FERMI NATIONAL ACCELERATOR LABORATORY
UNITED STATES DEPARTMENT OF ENERGY

NOVA-ANU TARGET HALL
MEDIUM ENERGY TARGET MARK II
HORIZ BUDAL BRACKET ASSEMBLY

SCALE	DRAWING NUMBER	SHEET	REV
2:1	8875.112-MD-433913	1 OF 1	

CREATED WITH : Ideas12NXSeries | GROUP: ACCELERATOR MECH. SUPPT.