REV	DESCRIPTION	DRAWN	DATE
		APPROVED	DATE

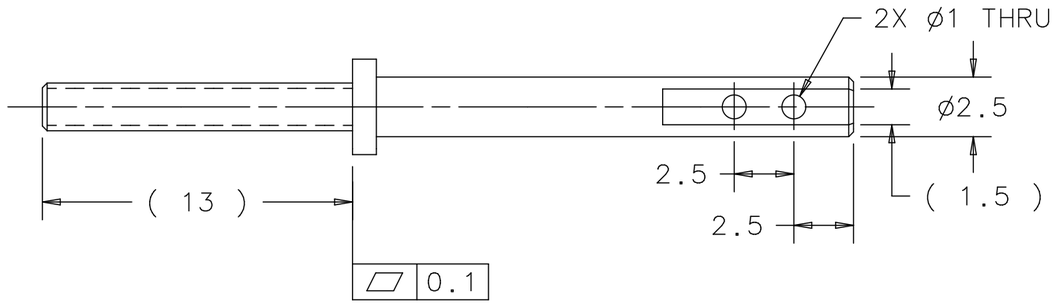

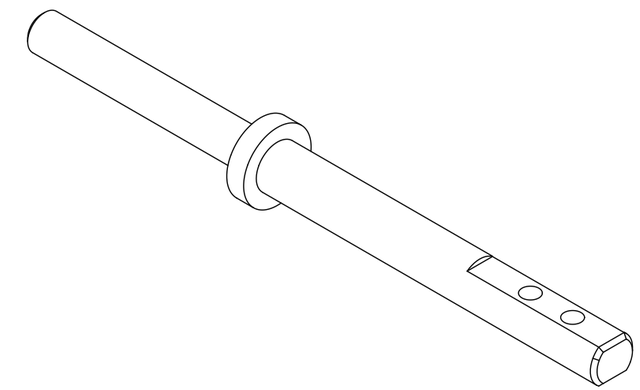

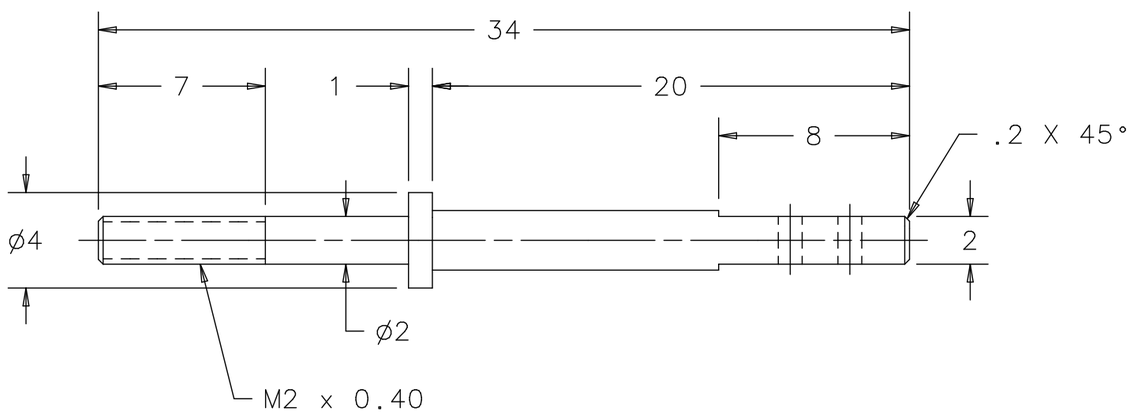

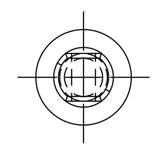

UNLESS OTHERWISE SPECIFIED		
METRIC	X.X	ANGLES
± 0.25	± 0.1	± .5°

1. BREAK ALL SHARP EDGES 0.4 MAX.
2. DO NOT SCALE DRAWING.
3. DIMENSIONS BASED UPON ASME Y14.5M-1994
4. MAX. ALL MACH. SURFACES 1.6
5. DRAWING UNITS: METRIC

ORIGINATOR	M.MCGEE	02-OCT-2012
DRAWN	R.STEWART	02-OCT-2012
CHECKED	M.MCGEE	30-NOV-2012
APPROVED	M.MCGEE	30-NOV-2012
USED ON	MD-433913 MD-433916	
MATERIAL	6061-T651 ALUMINUM	

FERMI NATIONAL ACCELERATOR LABORATORY
UNITED STATES DEPARTMENT OF ENERGY

NOVA-ANU TARGET HALL
MEDIUM ENERGY TARGET MARK II
BUDAL CONNECTION ROD

SCALE	DRAWING NUMBER	SHEET	REV
4:1	8875.112-MB-433912	1 OF 1	

CREATED WITH : Ideas12NXSeries | GROUP: ACCELERATOR MECH. SUPPT.

Created: 13:52:53 on 05-02-13 (D-M-Y) By: rstewart State: 3-RELEASED