REV	DESCRIPTION	DRAWN	DATE
		APPROVED	DATE

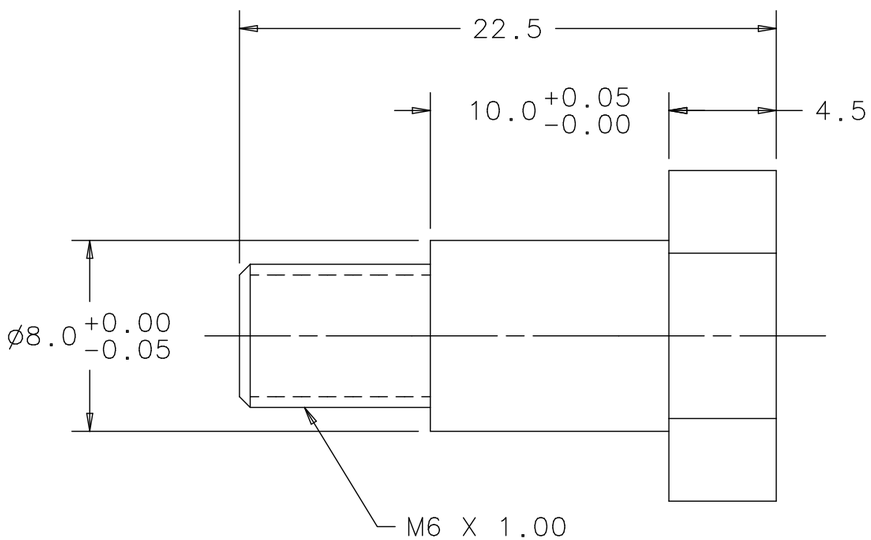

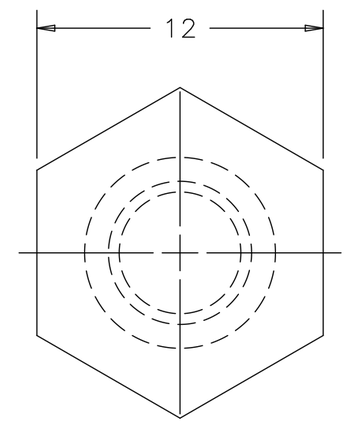

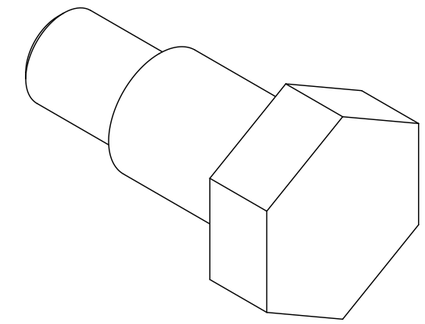

NOTE:
PART CAN BE PURCHASED WITH ANODIZE 7075-T73 ALUMINUM AS THE MATERIAL OR, IF MACHINED, AFTER MACHINING HARDCOAT ANODIZE TYPE III CLASS 1 TO 0.025mm - 0.05mm TOTAL LAYER THICKNESS FOLLOWED BY MID-TEP NICKEL ACETATE SEAL.

UNLESS OTHERWISE SPECIFIED		
METRIC	X.X	ANGLES
± 0.25	± 0.1	± .5°

1. BREAK ALL SHARP EDGES 0.4 MAX.
2. DO NOT SCALE DRAWING.
3. DIMENSIONS BASED UPON ASME Y14.5M-1994
4. MAX. ALL MACH. SURFACES 1.6
5. DRAWING UNITS: METRIC

ORIGINATOR	M.MCGEE	02-OCT-2012
DRAWN	R.STEWART	02-OCT-2012
CHECKED	M.MCGEE	30-NOV-2012
APPROVED	M.MCGEE	30-NOV-2012

USED ON: ME-433925

MATERIAL: 7075-T73 ALUMINUM

FERMI NATIONAL ACCELERATOR LABORATORY
UNITED STATES DEPARTMENT OF ENERGY

NOVA-ANU TARGET HALL
MEDIUM ENERGY TARGET MARK II
8MM DIA X 10MM LG SHOULDER SCREW

SCALE	DRAWING NUMBER	SHEET	REV
4:1	8875.112-MB-433911	1 OF 1	

CREATED WITH : Ideas12NXSeries | GROUP: ACCELERATOR MECH. SUPPT.

Created: 13:52:20 on 05-02-13 (D-M-Y) By: rstewart State: 3-RELEASED