REV	DESCRIPTION	DRAWN	DATE
		APPROVED	DATE

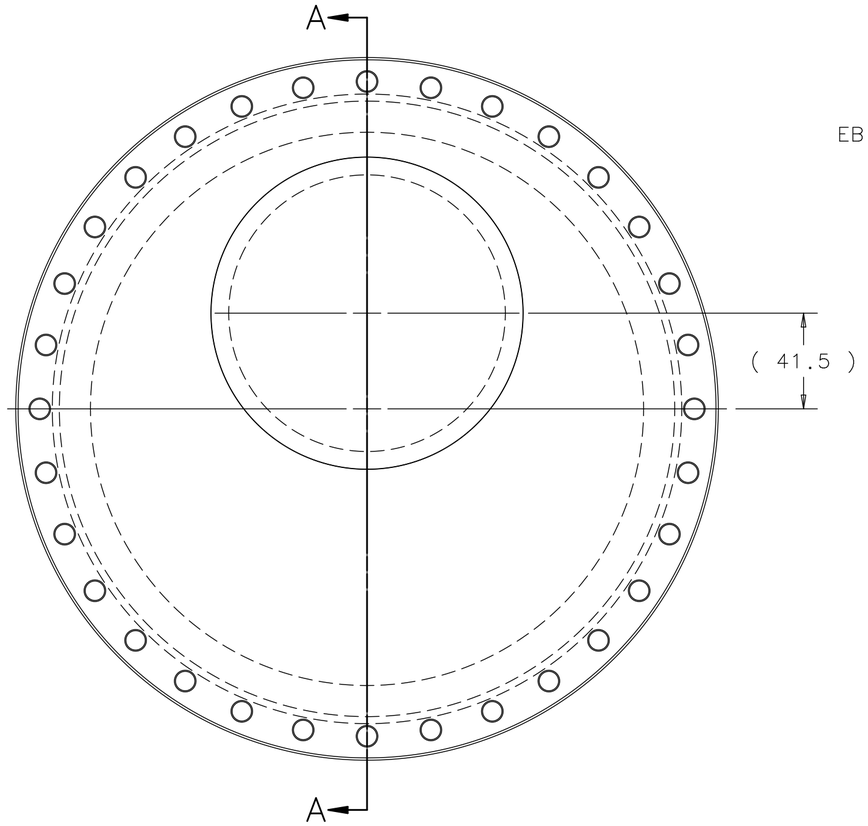

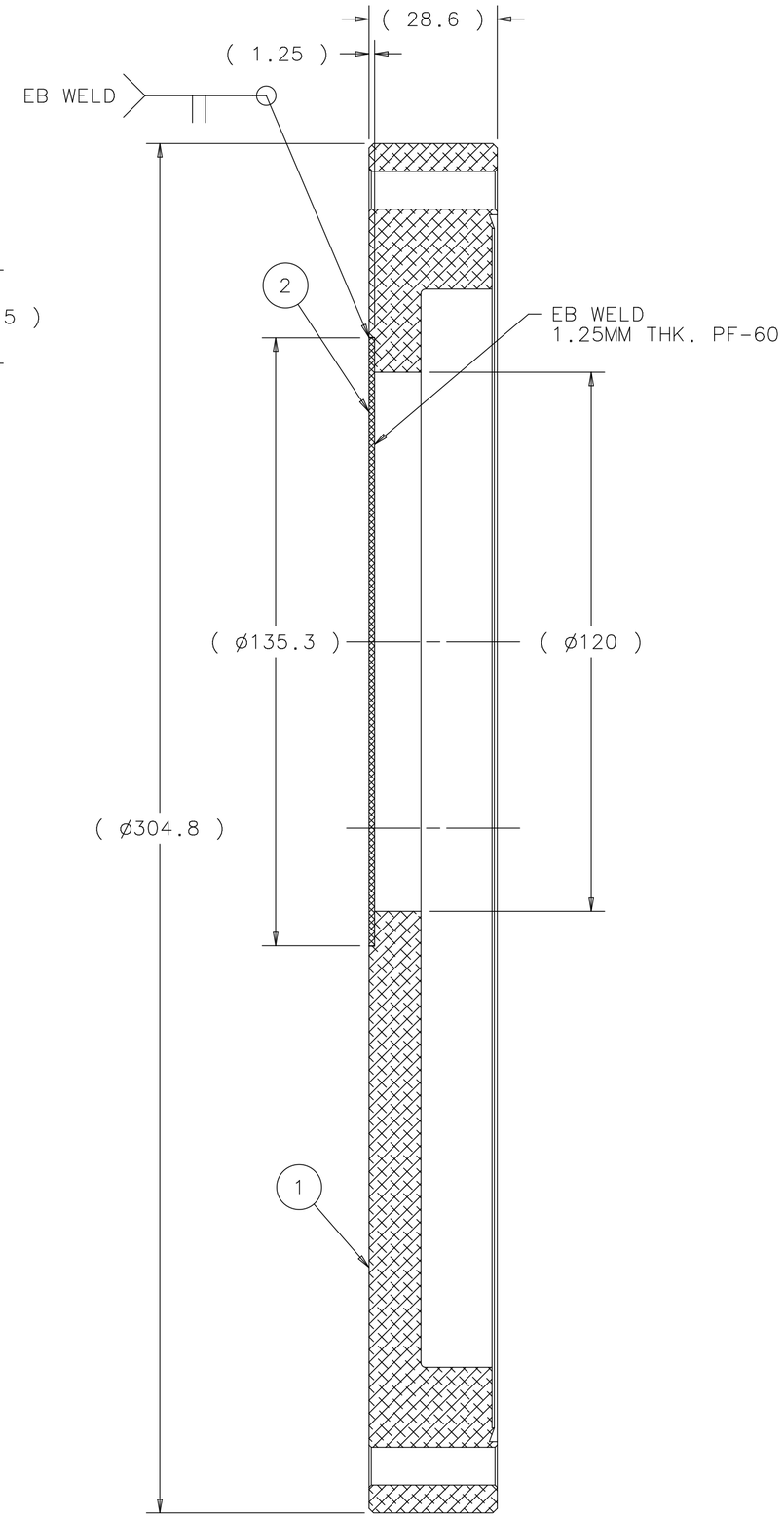

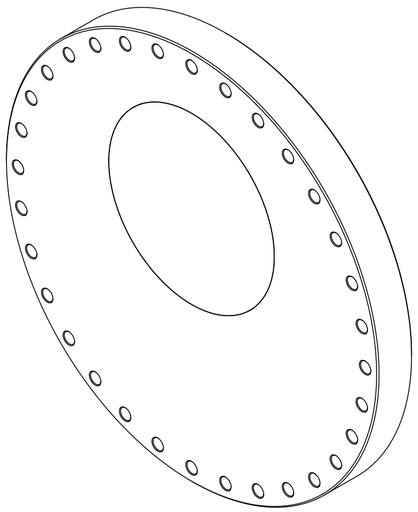

SECTION A-A
SCALE: FULL

ITEM	PART NO.	DESCRIPTION OR SIZE	QTY.
2	MB-433718	BERYLLIUM MEMBRANE	1
1	MC-433908	DOWNSTREAM ENDWALL	1

PARTS LIST

UNLESS OTHERWISE SPECIFIED			ORIGINATOR	M.MCGEE	02-OCT-2012
METRIC	X.X	ANGLES	DRAWN	R.STEWART	02-OCT-2012
± 0.25	± 0.1	± .5°	CHECKED	M.MCGEE	30-NOV-2012
			APPROVED	M.MCGEE	30-NOV-2012

1. BREAK ALL SHARP EDGES 0.4 MAX.
2. DO NOT SCALE DRAWING.
3. DIMENSIONS BASED UPON ASME Y14.5M-1994
4. MAX. ALL MACH. SURFACES 1.6
5. DRAWING UNITS: METRIC

USED ON: ME-433886

MATERIAL: SEE PARTS LIST ABOVE

FERMI NATIONAL ACCELERATOR LABORATORY
UNITED STATES DEPARTMENT OF ENERGY

NOVA-ANU TARGET HALL
MEDIUM ENERGY TARGET MARK II
DOWNSTREAM ENDWALL ASSEMBLY

SCALE	DRAWING NUMBER	SHEET	REV
1:2	8875.112-MC-433909	1 OF 1	

CREATED WITH : Ideas12NXSeries | GROUP: ACCELERATOR MECH. SUPPT.

NOTES: 1. TO BE MASS SPECTROMETER LEAK TIGHT WITH NO LEAKS GREATER THAN 1 X 10-7 ATM CC/SEC OF HELIUM.

2. DIMENSIONS ARE REFERENCE ONLY. DIMENSIONS ARE TO BE INSPECTED AGAINST DETAIL DRAWINGS.