| REV | DESCRIPTION | DRAWN | DATE |
|---|---|---|---|
| | | APPROVED | DATE |

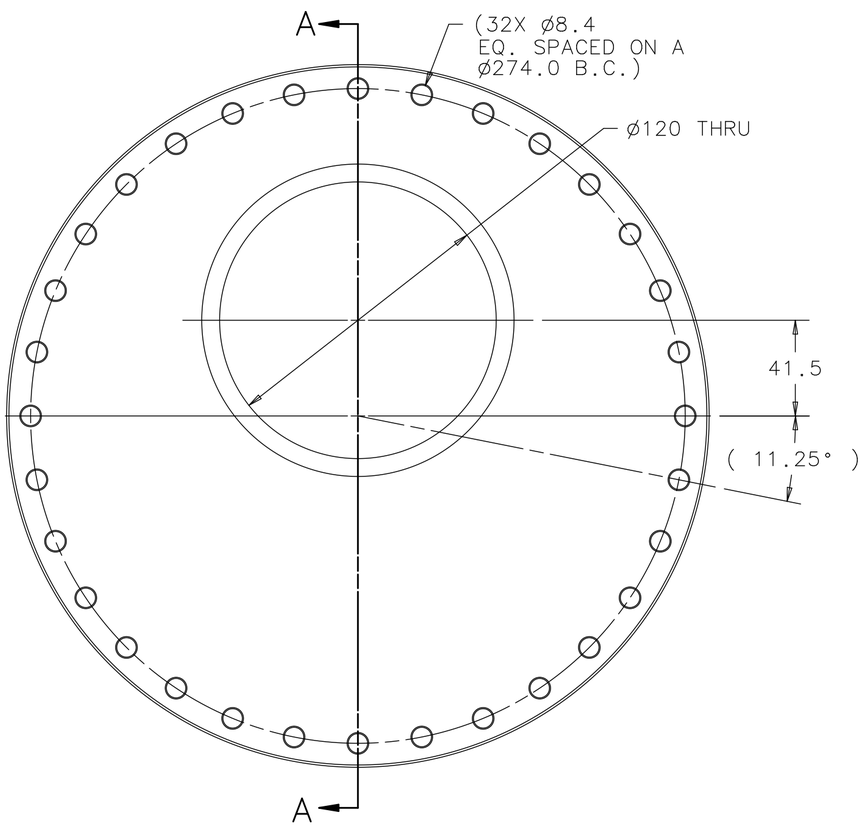


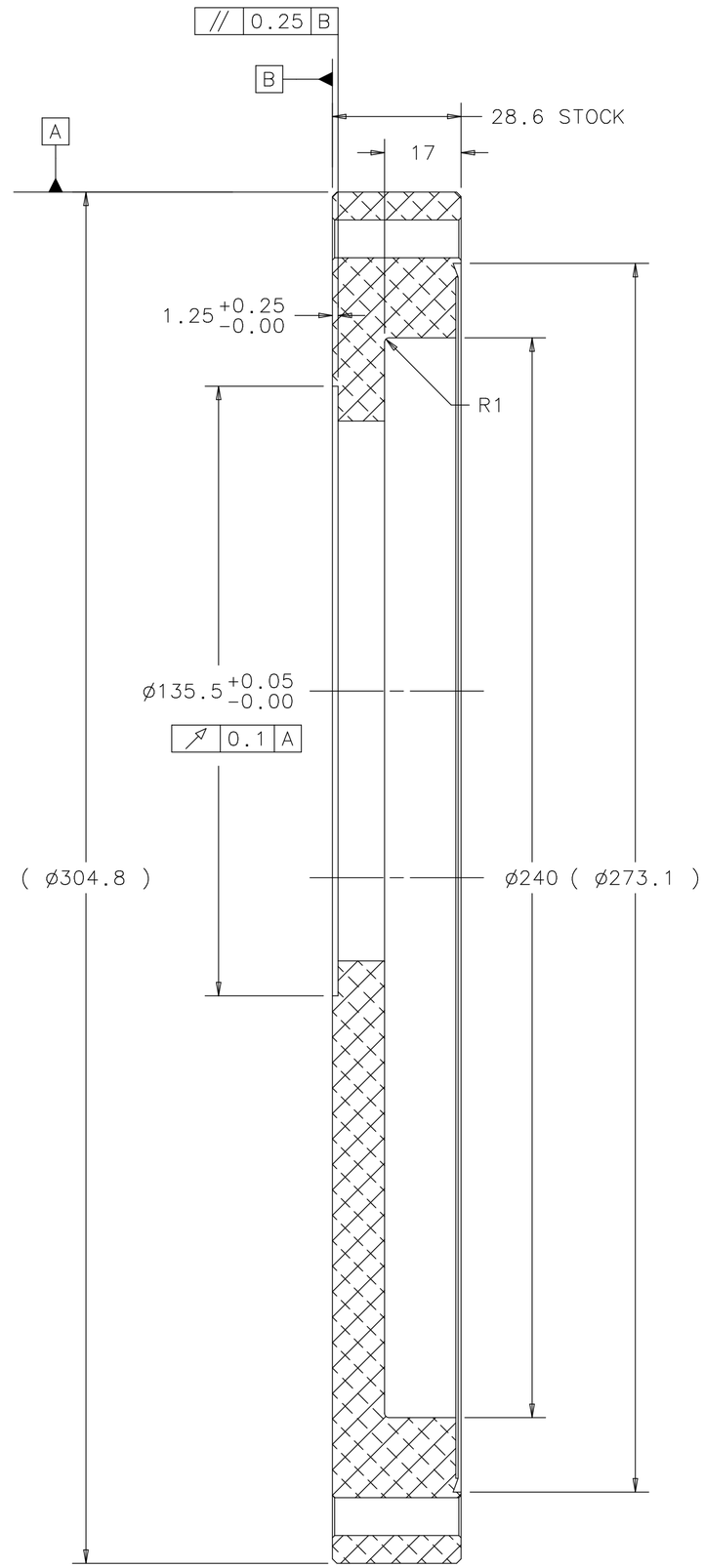


SECTION A-A
SCALE FULL

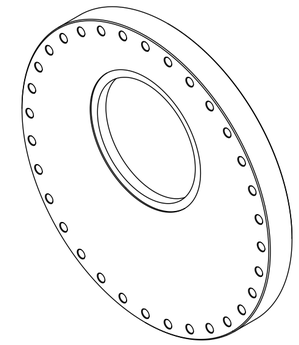

| UNLESS OTHERWISE SPECIFIED | | | ORIGINATOR | M.MCGEE | 27-SEP-2012 |
|---|---|---|---|---|---|
| METRIC | .X | ANGLES | DRAWN | R.STEWART | 27-SEP-2012 |
| ± .03 | ± .1 | ± .5° | CHECKED | M.MCGEE | 30-NOV-2012 |
| | | | APPROVED | M.MCGEE | 30-NOV-2012 |

1. BREAK ALL SHARP EDGES .3 MAX.
2. DO NOT SCALE DRAWING.
3. DIMENSIONS BASED UPON ASME Y14.5M-1994
4. MAX. ALL MACH. SURFACES √
5. DRAWING UNITS: METRIC

USED ON
MC-433909

MATERIAL
12" (304.8MM) O.D. 6061-T6 ALUMINUM
NOR-CAL PRODUCTS NONROTATABLR BLANK CF

FERMI NATIONAL ACCELERATOR LABORATORY
UNITED STATES DEPARTMENT OF ENERGY

# NOVA-ANU TARGET HALL
# MEDIUM ENERGY TARGET MARK II
# DOWNSTREAM ENDWALL

| SCALE | DRAWING NUMBER | SHEET | REV |
|---|---|---|---|
| 1:2 | 8875.112-MC-433908 | 1 OF 1 | |

CREATED WITH : Ideas12NXSeries | GROUP: ACCELERATOR MECH. SUPPT.