REV	DESCRIPTION	DRAWN / APPROVED	DATE / DATE
A	MODEL UPDATED	R.STEWART	08-FEB-2013
		M.MCGEE	08-FEB-2013

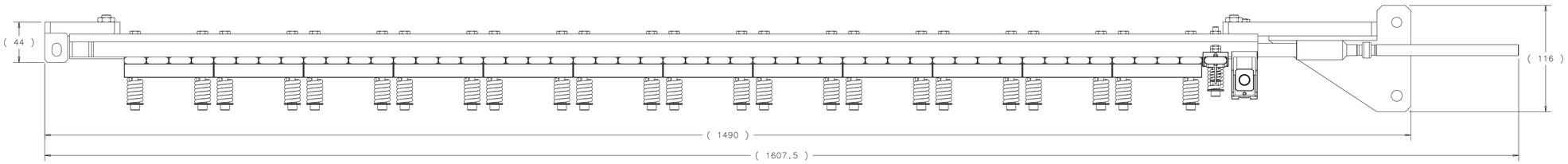

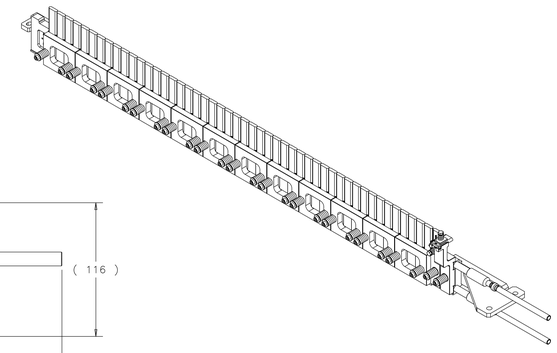

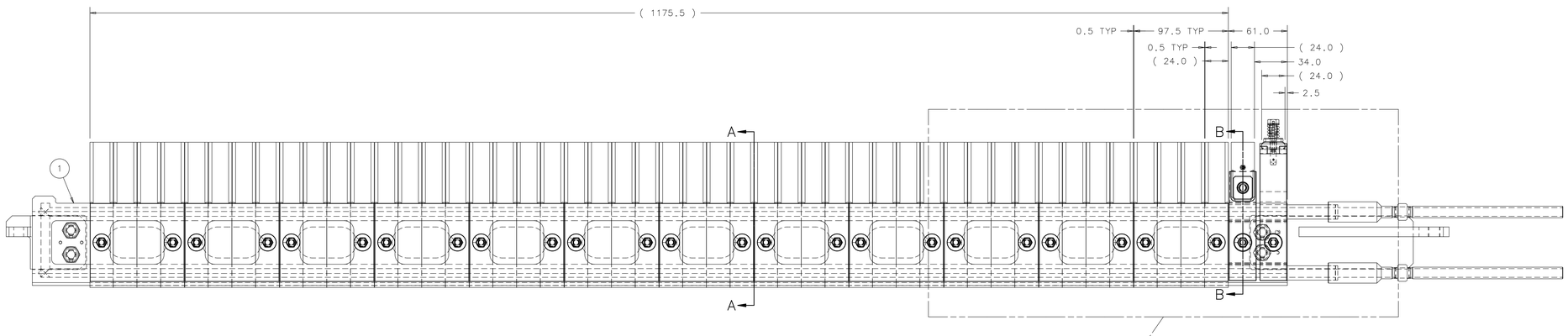

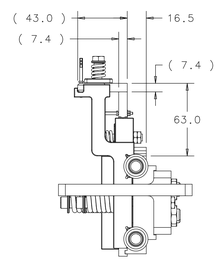

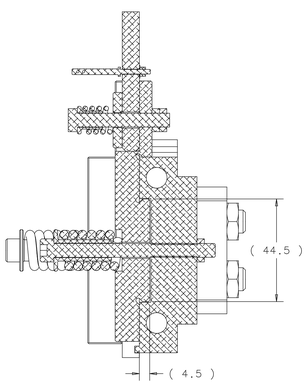

SECTION B-B
SCALE: FULL

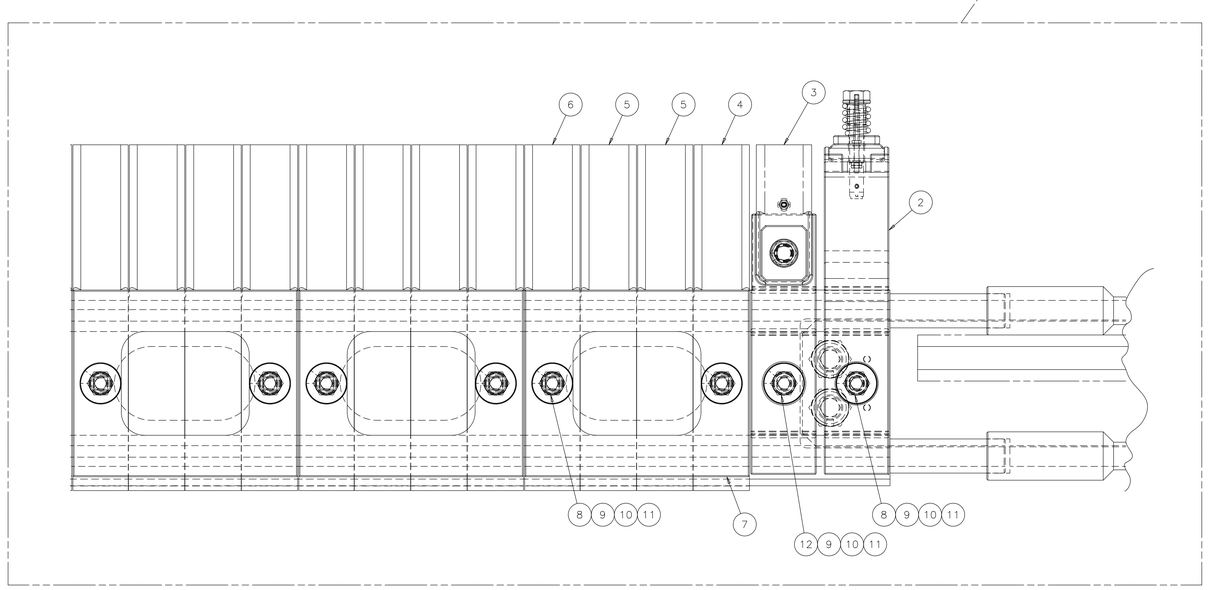

SCALE: FULL

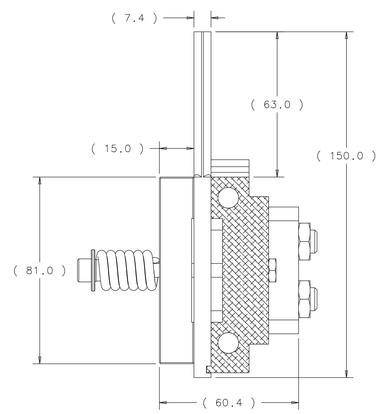

SECTION A-A
SCALE: FULL

ITEM	PART NO.	DESCRIPTION OR SIZE	QTY.
12	MB-433931	M6 x 1.00 X 70 LG SHCS ANODIZED 7075-T73 ALUMINUM	1
11		ø17.48 O.D. COMPRESSION SPRING SS LEE SPRINGS P/N LC 150HK 045	26
10	MB-433935	M6 x 1.00 JAM HEX NUT ANODIZED 7075-T73 ALUMINUM	26
9	MC-433798	SPRING CENTERING WASHER	26
8	MB-433932	M6 x 1.00 X 80 LG SHCS ANODIZED 7075-T73 ALUMINUM	25
7	MC-433743	TARGET FIN PRESSING PLATE	12
6	MC-433729	DOWNSTREAM TARGET FIN	12
5	MC-433728	TARGET FIN	24
4	MC-4333742	UPSTREAM TARGET FIN	12
3	MCD-433913	HORIZONTAL BUDAL BRACKET ASSEMBLY	1
2	MD-433916	VERTICAL BUDAL BRACKET ASSEMBLY	1
1	MD-433904	COOLING RAIL ASSEMBLY	1

PARTS LIST

UNLESS OTHERWISE SPECIFIED			ORIGINATOR	M.MCGEE	27-SEP-2012
METRIC	X.X	ANGLES	DRAWN	R.STEWART	27-SEP-2012
± 0.25	± 0.1	± .5°	CHECKED	M.MCGEE	30-NOV-2012
			APPROVED	M.MCGEE	30-NOV-2012

1. BREAK ALL SHARP EDGES 0.4 MAX.
2. DO NOT SCALE DRAWING.
3. DIMENSIONS BASED UPON ASME Y14.5M-1994
4. MAX. ALL MACH. SURFACES 1.6
5. DRAWING UNITS: METRIC

USED ON: ME-433925

MATERIAL: SEE PARTS LIST ABOVE

FERMI NATIONAL ACCELERATOR LABORATORY
UNITED STATES DEPARTMENT OF ENERGY

NOVA-ANU TARGET HALL MEDIUM ENERGY TARGET MARK II TARGET FIN ASSEMBLY

SCALE	DRAWING NUMBER	SHEET	REV
1:2	8875.112-ME-433907	1 OF 1	A

CREATED WITH : Ideas12NXSeries GROUP: ACCELERATOR MECH. SUPPT.