REV	DESCRIPTION	DRAWN	DATE
		APPROVED	DATE
A	MODEL UPDATED	R.STEWART	08-FEB-2013
		M.MCGEE	08-FEB-2013

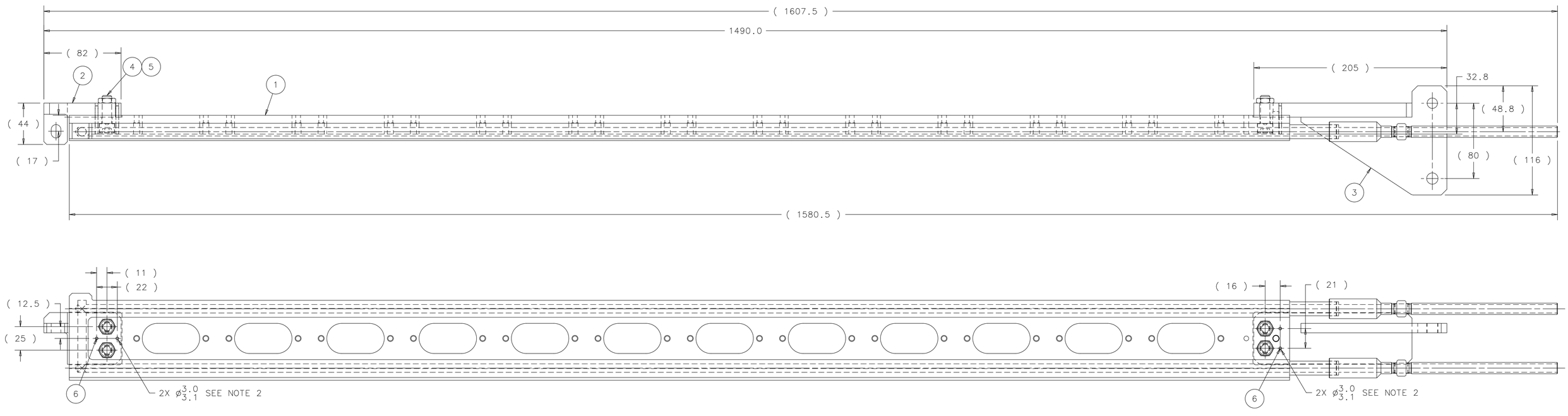

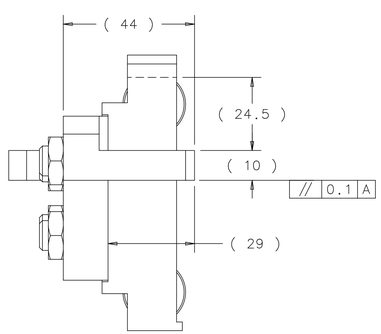

LEFT VIEW
(DOWNSTREAM)
SCALE: FULL

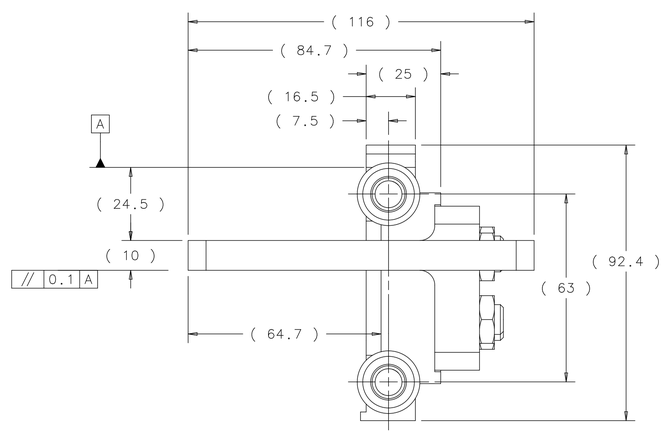

RIGHT VIEW
(UPSTREAM)
SCALE: FULL

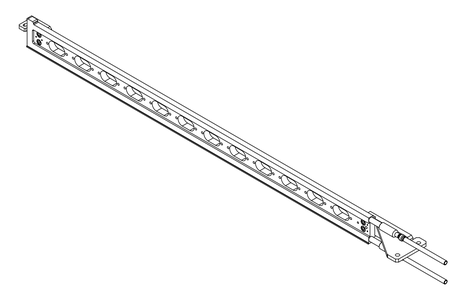

ITEM	PART NO.	DESCRIPTION OR SIZE	QTY.
6		M3 X 30 ROLL PIN SS MCMASTER-CARR PN 91610A412	4
5	MB-433926	M10 x 1.50 JAM HEX NUT ANODIZED 7075-T73 ALUMINUM	4
4	MB-433865	M10 x 1.50 X 30 LG VENTED SHCS ANODIZED 7075-T73 ALUMINUM	4
3	MC-433906	COOLING RAIL BRACKET US	1
2	MB-433905	COOLING RAIL BRACKET DS	1
1	MD-433901	COOLING RAIL WELDMENT	1

PARTS LIST

UNLESS OTHERWISE SPECIFIED			ORIGINATOR	M.MCGEE	26-SEP-2012
METRIC	X.X	ANGLES	DRAWN	R.STEWART	26-SEP-2012
± 0.25	± 0.1	± .5°	CHECKED	M.MCGEE	30-NOV-2012
			APPROVED	M.MCGEE	30-NOV-2012

1. BREAK ALL SHARP EDGES 0.4 MAX.
2. DO NOT SCALE DRAWING.
3. DIMENSIONS BASED UPON ASME Y14.5M-1994
4. MAX. ALL MACH. SURFACES 1.6
5. DRAWING UNITS: METRIC

USED ON: ME-433907

MATERIAL: SEE PARTS LIST ABOVE

FERMI NATIONAL ACCELERATOR LABORATORY
UNITED STATES DEPARTMENT OF ENERGY

NOVA-ANU TARGET HALL MEDIUM ENERGY TARGET MARK II COOLING RAIL ASSEMBLY

SCALE	DRAWING NUMBER	SHEET	REV
1:2	8875.112-MD-433904	1 OF 1	A

CREATED WITH : Ideas12NXSeries | GROUP: ACCELERATOR MECH. SUPPT.

NOTES: 1. DATUM A SURFACE TO BE USED TO ALIGN ITEM 1 TO ITEMS(2 AND 3).

2. DRILL HOLES FOR PIN (ITEM 6) USING PILOT HOLES FROM ITEMS 2 AND 3 AFTER COMPLETELY ALIGNING ASSEMBLY.