REV	DESCRIPTION	DRAWN	DATE
		APPROVED	DATE

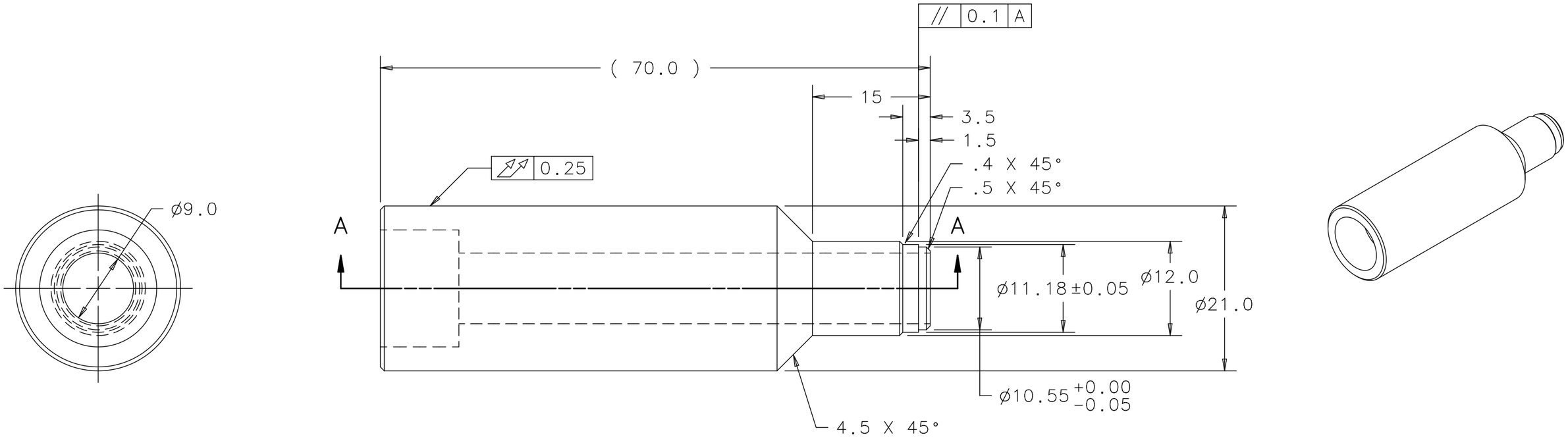

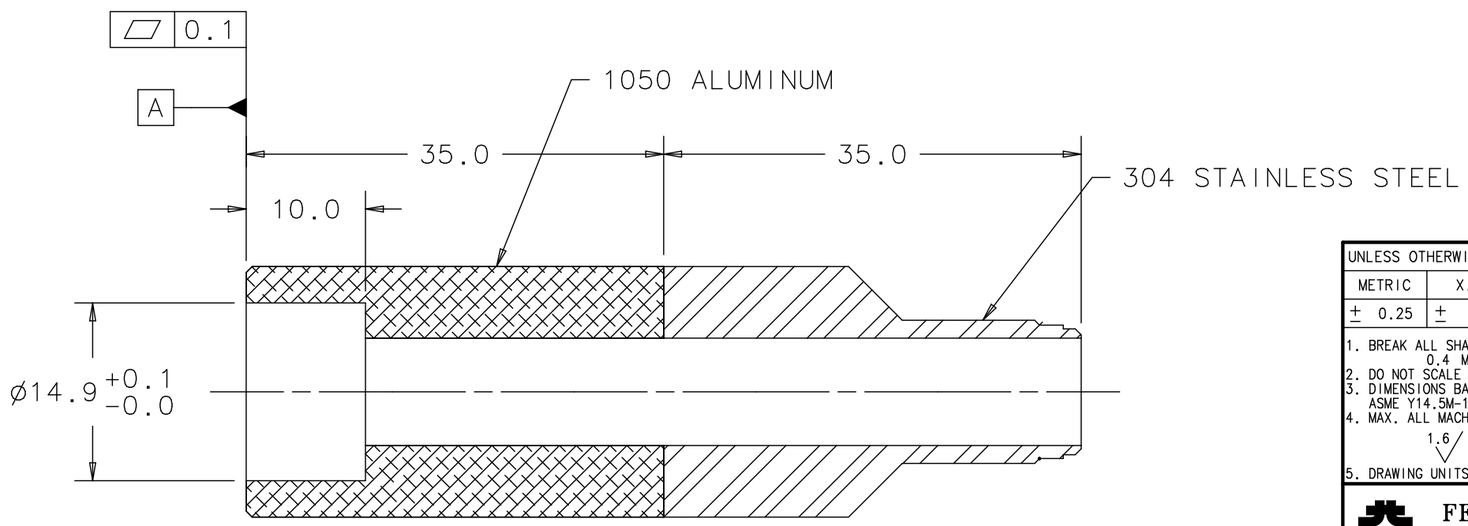

SECTION A-A
SCALE 2:1

UNLESS OTHERWISE SPECIFIED			ORIGINATOR	M.MCGEE	25-SEP-2012
METRIC	X.X	ANGLES	DRAWN	R.STEWART	25-SEP-2012
± 0.25	± 0.1	± .5°	CHECKED	M.MCGEE	06-NOV-2012
			APPROVED	M.MCGEE	06-NOV-2012

1. BREAK ALL SHARP EDGES 0.4 MAX.
2. DO NOT SCALE DRAWING.
3. DIMENSIONS BASED UPON ASME Y14.5M-1994
4. MAX. ALL MACH. SURFACES 1.6
5. DRAWING UNITS: METRIC

USED ON: MD-433901

MATERIAL: 1050 ALUMINUM/304 SS ROLL CLAD TRANSITION MATERIAL

FERMI NATIONAL ACCELERATOR LABORATORY
UNITED STATES DEPARTMENT OF ENERGY

NOVA-ANU TARGET HALL MEDIUM ENERGY TARGET MARK II TRANSITION BUSHING

SCALE	DRAWING NUMBER	SHEET	REV
4:1	8875.112-MB-433902	1 OF 1	

CREATED WITH : Ideas12NXSeries GROUP: ACCELERATOR MECH. SUPPT.

Created: 13:48:43 on 05-02-13 (D-M-Y) By: rstewart State: 3-RELEASED