REV	DESCRIPTION	DRAWN	DATE
		APPROVED	DATE

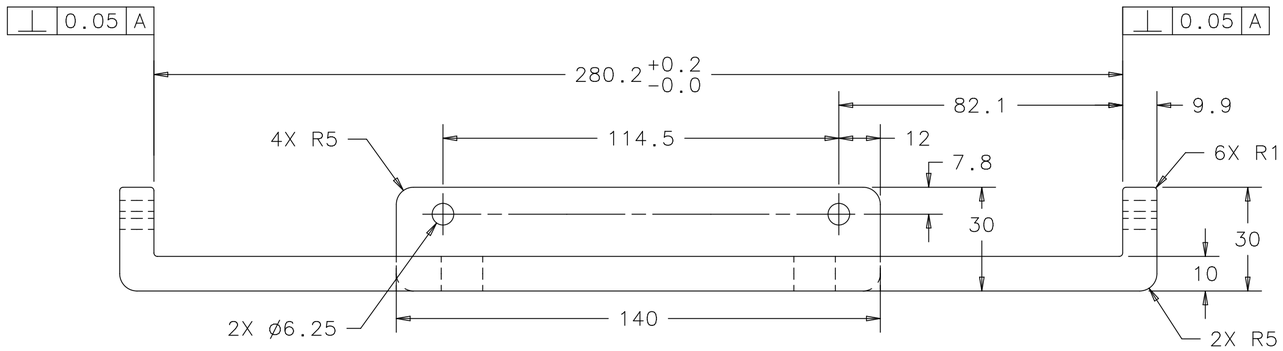

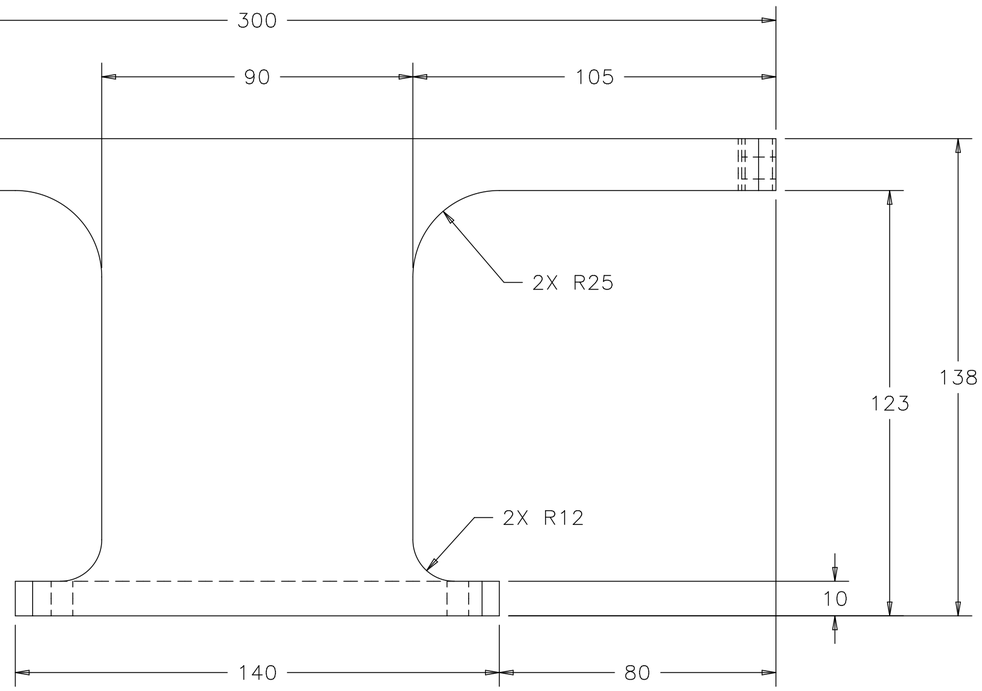

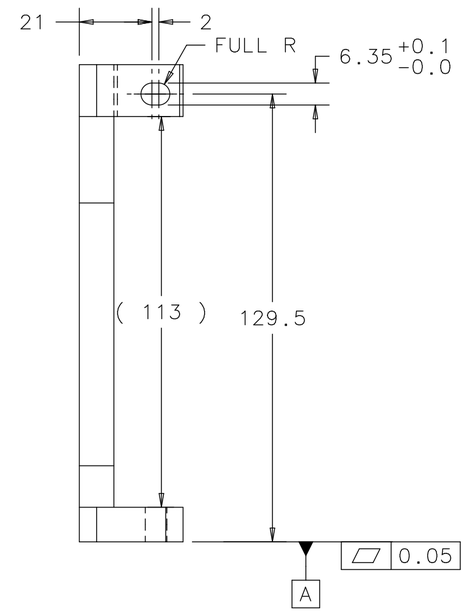

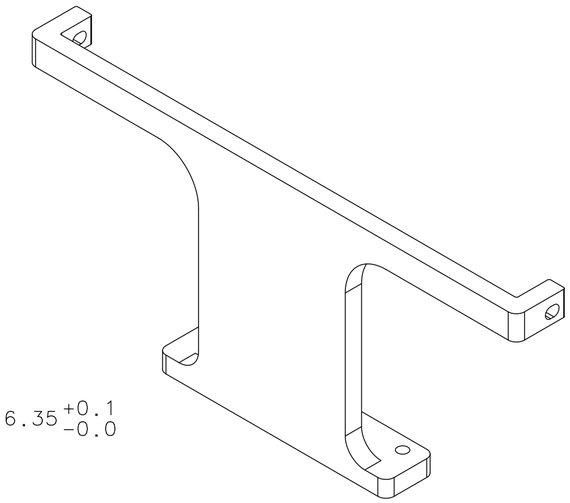

UNLESS OTHERWISE SPECIFIED			ORIGINATOR	M.MCGEE/P.HURH	09-AUG-2011
METRIC	X.X	ANGLES	DRAWN	R.STEWART	09-AUG-2011
± 0.25	± 0.1	± .5°	CHECKED	P.HURH	07-SEP-2011
1. BREAK ALL SHARP EDGES 0.4 MAX. 2. DO NOT SCALE DRAWING. 3. DIMENSIONS BASED UPON ASME Y14.5M-1994 4. MAX. ALL MACH. SURFACES 1.6 5. DRAWING UNITS: METRIC			APPROVED	M.MCGEE	07-SEP-2011
			USED ON	ME-433791	
			MATERIAL	6061-T6 ALUMINUM	

FERMI NATIONAL ACCELERATOR LABORATORY
UNITED STATES DEPARTMENT OF ENERGY

NOVA-ANU TARGET HALL MEDIUM ENERGY TARGET RAIL SUPPORT ALIGNMENT JIG

SCALE	DRAWING NUMBER	SHEET	REV
1:1	8875.112-MC-433787	1 OF 1	

CREATED WITH : Ideas12NXSeries | GROUP: ACCELERATOR MECH. SUPPT.