| REV | DESCRIPTION | DRAWN | DATE |
|---|---|---|---|
| | | APPROVED | DATE |
| A | V GROOVE ADDED | R.STEWART | 14-NOV-2011 |
| | | P.HURH | 29-NOV-2011 |

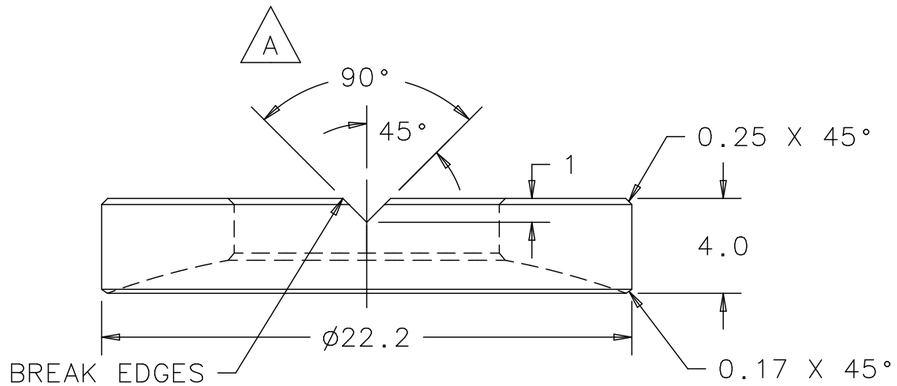


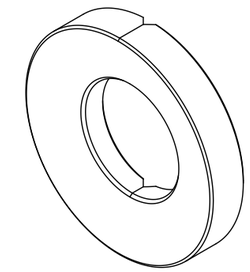

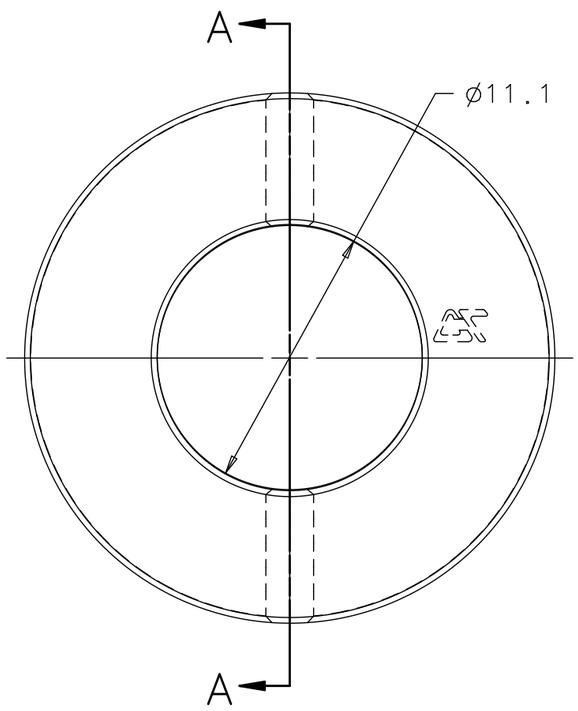


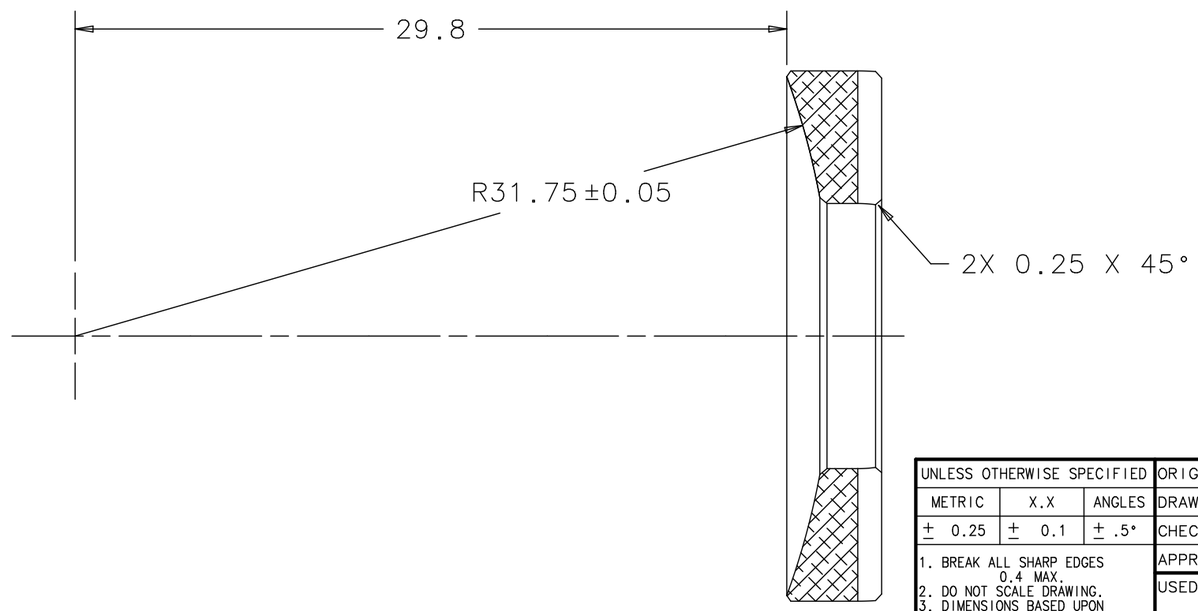


SECTION A-A

NOTE: HARDCOAT ANODIZE TYPE III CLASS 1 TO 0.25MM-0.05MM TOTAL LAYER THICKNESS FOLLOWED BY MID-TEMP NICKEL ACETATE SEAL.

| UNLESS OTHERWISE SPECIFIED | | | ORIGINATOR | M.MCGEE/P.HURH | 27-JUL-2011 |
|---|---|---|---|---|---|
| METRIC | X.X | ANGLES | DRAWN | R.STEWART | 27-JUL-2011 |
| ± 0.25 | ± 0.1 | ± .5° | CHECKED | P.HURH | 07-SEP-2011 |
| 1. BREAK ALL SHARP EDGES 0.4 MAX. | | | APPROVED | M.MCGEE | 07-SEP-2011 |
| 2. DO NOT SCALE DRAWING. | | | USED ON | ME-433791 | |
| 3. DIMENSIONS BASED UPON ASME Y14.5M-1994 | | | | | |
| 4. MAX. ALL MACH. SURFACES 1.6 | | | MATERIAL | 6061-T6 ALUMINUM | |
| 5. DRAWING UNITS: METRIC | | | | | |

FERMI NATIONAL ACCELERATOR LABORATORY
UNITED STATES DEPARTMENT OF ENERGY

# NOVA-ANU TARGET HALL
# MEDIUM ENERGY TARGET
# M10 SPHERICAL WASHER BOTTOM

| SCALE | DRAWING NUMBER | SHEET | REV |
|---|---|---|---|
| 4:1 | 8875.112-MB-433776 | 1 OF 1 | A |

CREATED WITH : Ideas12NXSeries | GROUP: ACCELERATOR MECH. SUPPT.

Created: 15:40:08 on 13-12-11 (D-M-Y) By: rstewart State: 3-RELEASED