REV	DESCRIPTION	DRAWN	DATE
		APPROVED	DATE

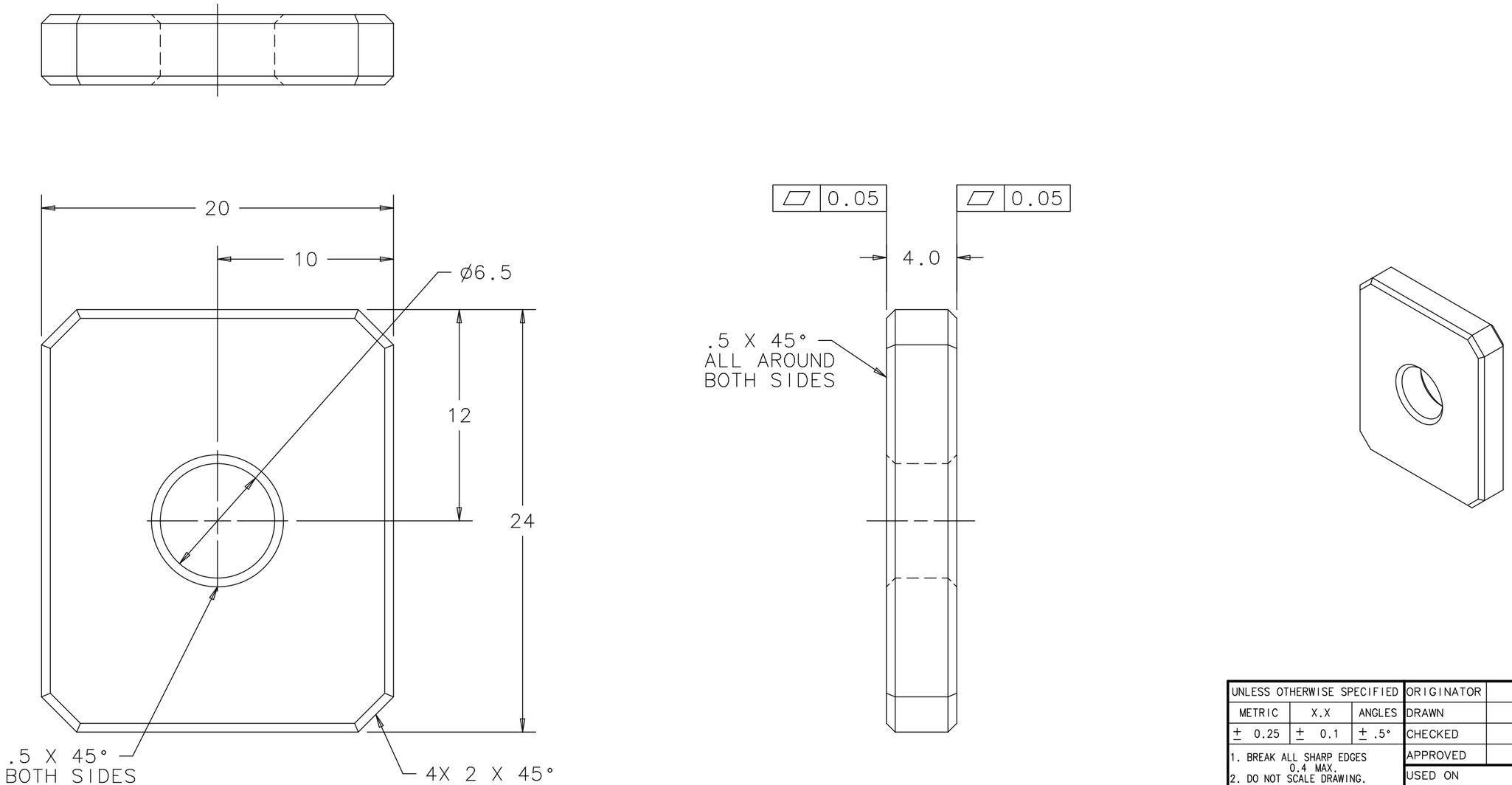

NOTE: HARDCOAT ANODIZE TYPE III CLASS 1 TO 0.025mm - 0.05mm
TOTAL LAYER THICKNESS FOLLOWED BY MID-TEMP NICKEL ACETATE SEAL.

UNLESS OTHERWISE SPECIFIED			ORIGINATOR	M.MCGEE/P.HURH	05-APR-2011
METRIC	X.X	ANGLES	DRAWN	R.STEWART	05-APR-2011
± 0.25	± 0.1	± .5°	CHECKED	P.HURH	30-JUN-2011
1. BREAK ALL SHARP EDGES 0.4 MAX. 2. DO NOT SCALE DRAWING. 3. DIMENSIONS BASED UPON ASME Y14.5M-1994 4. MAX. ALL MACH. SURFACES 1.6 5. DRAWING UNITS: METRIC			APPROVED	M.MCGEE	30-JUN-2011
			USED ON	MC-433744	
			MATERIAL	6061-T651 ALUMINUM	

FERMI NATIONAL ACCELERATOR LABORATORY
UNITED STATES DEPARTMENT OF ENERGY

NOVA-ANU TARGET HALL
MEDIUM ENERGY TARGET
BUDAL FIN PRESSING PLATE

SCALE	DRAWING NUMBER	SHEET	REV
4:1	8875.112-MB-433747	1 OF 1	

CREATED WITH : Ideas12NXSeries | GROUP: ACCELERATOR MECH. SUPPT.

Created: 14:33:58 on 22-12-11 (D-M-Y) By: rstewart State: 3-RELEASED