| | | |
|---|---|---|
| | BNG- Project-No.:S.911012 | |
| | **DESY EV 010-04-S1** | |
| | Würzburg, 27.09.2007 | Alfred-Nobel-Str. 20 |
| | Doc. No.: DESY EV 010-04-S1 | 97080 Würzburg |
| | Revision: n.a. | GERMANY |

# Special Issue I:

# Transportation of Cryomodules

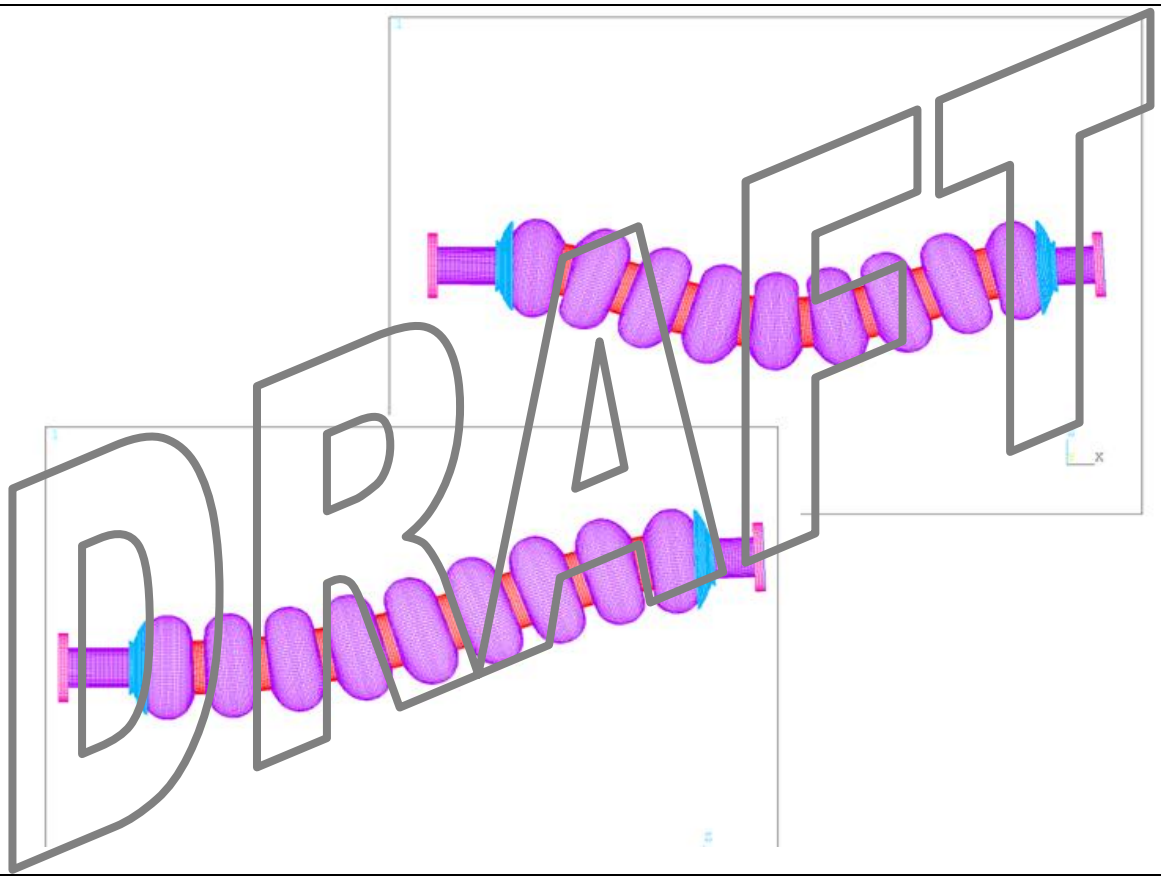



| | | |
|---|---|---|
| Author:<br>Department:<br>E –mail-Address | Dr. Günther. Sikler<br>BMV<br>guenther.sikler@babcocknoell.de | |
| Reviewed:<br>Department:<br>E –mail-Address | Cristian Boffo<br>BMV<br>cristian.boffo@babcocknoell.de | |

# Abstract

This special section of the study deals with the issue of cryomodule transportation. Cryomodules have been designed keeping in mind the thermal heat leak and alignment after cool down requirements, but were not optimized for transportation. In particular the cold mass and the cavity string are suspended inside the vacuum vessel by means of three posts that strongly influence the capability of the internal delicate parts to accept accelerations and forces that one can expect during shipping.

In order to understand the problem, several shipping scenarios have been analyzed to identify the best position of the modules in the carrier and the type/direction of solicitations.

A detailed analysis looking for the more delicate components has been performed. Such search allowed identifying, as one would expect, the cavities and the couplers, together with their coupling system via the invar rod, to be the parts that most likely will get damaged during transportation. In order to better understand the limits of acceleration and stress that these components can sustain, a deep finite element analysis was performed resulting in values for the maximum tolerable accelerations. Finally a number of solutions to limit the damage of the internal parts of the modules have been identified and proposed.

# Table of Contents


1. Introduction ..... 8
2. General Description ..... 9
   2.1. XFEL Cryomodule ..... 9
   2.2. Orientation and Coordinate System ..... 13
   2.3. Suspension and Support ..... 14
3. Cold Mass Support System ..... 16
   3.1. Vertical Direction ..... 17
      Needle Bearings ..... 18
      Thermal Separation Structure (fibreglass reinforced plastic - GRP) ..... 19
      Vertical Force Propagation ..... 19
   3.2. Acceleration in the Horizontal Plane ..... 20
   3.3. Cavity-String under Inertial Forces ..... 24
4. The Cavity System ..... 29
   4.1. Damage ..... 29
   4.2. Description ..... 30
   4.3. FE-Modelling ..... 31
      Compensator Bellows ..... 33
   4.4. Calculations and Analysis ..... 35
      Axial acceleration – evaluation recipe ..... 35
      Lateral shocks – a case study ..... 38

Coupling of degrees of freedom ..... 40
Weakest component ..... 41
5. The RF-Coupler Unit ..... 43
6. Suggested Tools ..... 47
6.1. Transport Caps ..... 47
6.2. Clamping Elements ..... 49
7. Summary ..... 50

# List of Figures

Fig. 2.1: Sectioned View of an XFEL Cryomodule..... 11
Fig. 2.2: Schematic overview of an individual cavity and details of its support system... 12
Fig. 2.3: Picture of an XFEL cryomodule (the completed module 6). ..... 13
Fig. 3.1: Cross section of the top part of a sliding support post. ..... 18
Fig. 3.2: Schematic overview of the horizontal adjustment screw-configuration. ..... 21
Fig. 3.3: Sectioned view reflecting a tilt of the cold mass/post system with respect to the outer tank. ..... 22
Fig. 3.4: Schematic view of the string under axial acceleration. ..... 25
Fig. 4.1: Overview of the cavity system. ..... 30
Fig. 4.2: Sectioned view on the FE-model of the cavity system..... 32
Fig. 4.3: FE-Model of a Conical Flabes („Bordscheibe“)..... 33
Fig. 4.4: Transparent view of the FE-model of a cavity in its LHe-tank..... 34
Fig. 4.5: Compression of the cavity under an axial acceleration of 10 m/s$^2$..... 36
Fig. 4.6: Maximum material stress as function of axial acceleration. ..... 37
Fig. 4.7: Deformation modes depending on the bellow´s properties..... 38
Fig. 4.8: Deformation of the cavity under vertical load, two cases. ..... 39
Fig. 4.9: Maximum stress and deformation as function of vertical acceleration for the three analyzed cases. ..... 40
Fig. 4.10: Analysis of mechanical stress in other components of the cavity system..... 41

Fig. 4.11: Maximum stress as a function of acceleration for the critical components of the dressed cavity system. ..... 42
Fig. 5.1: Deflection of coupler antenna under vertical excitation of 1.5 g. ..... 44
Fig. 5.2: Colour-coded visualization of the material stress in the coupler unit. ..... 45
Fig. 6.1: Schematic overview of the transportation caps. ..... 48
Fig. 6.2: Sketch of the suggested clamping system to secure the string from axial motion. ..... 49

# 1. Introduction

The cryomodules are the fundamental bricks that will be installed in the XFEL tunnel to accelerate the electron beam. The present machine design calls for up to 105 of these modules to be fabricated and installed. The logistic on how to transport these 12 meter long units from a manufacturer's site to DESY, where they will be installed attached to the roof of the tunnel, without compromising the performance and the alignment of the internal components is not trivial neither straightforward.

Shipping of large but delicate components via standard ground transportation is a complex task that has to be worked out starting with an analysis of the products to be shipped and ending with the optimal shipping methods to be adopted.

As a result of this study several proposals for additional supports to be used during transportation and alternative clamping system to secure the cavities to the invar rod are suggested.



Created and released for publication by Babcock Noell GmbH. DRAFT Version

# 2. General Description

## 2.1. XFEL Cryomodule

Figure 2.1 shows the cross-section of an XFEL accelerator-module. The electron bunches are accelerated by means of 9-cell 1.3 GHz superconducting RF (SRF) cavities. The high frequency electro-magnetic wave which drives the electrons is feed into the cavity through the RF-coupler system. Due to its properties, niobium is the preferred material for SRF cavities. The working temperature of the SRF cavities is 2K which can be reached using super fluid helium.

The outer tank (being in contact with the atmosphere) is at ambient temperature while the cavities and auxiliary systems work at cryogenic temperature including the tuning motors. The presence of any type of gas would provide a very strong thermal link making it impossible to maintain the cold temperature necessary for the superconducting components. Hence the outer tank has to serve the purpose of an (isolation) vacuum vessel.



Created and released for publication by Babcock Noell GmbH. DRAFT Version

From the mechanical point of view, the outer vacuum vessel represents the boundary with respect to the 'outer world'. During transportation it acts as a natural protecting case. Support and bearing systems act only on points and zones of this outer vessel. No interaction is considered to act on any other component, besides inertial forces due to acceleration of the transport vehicle and gravity itself. (If the cavities are under vacuum during the transport, atmospheric pressure exerts additional forces to some of the internal components. This particular case will be discussed in a later part of this study.)

An additional thermal bridge is created by the presence of the mechanical support structures carrying the cold mass. By choosing a material with very small thermal conductivity (reinforced fibreglass) the heat load through this path is minimized. To reduce the heat transfer through instrumentation cables which also have to span from ambient temperature to parts of the cold mass, the cables are thin and long and are actively cooled at intermediate stages. In addition direct radiation is inhibited by the use of two thermal shields which are actively cooled. The radiation shielding is maximized by means of installation of super-insulation layers (MLI).

The gas return-tube (GRT) is (besides the outer vacuum vessel) the stiffest structure spanning over the whole length of the cryomodule. It is the backbone for the accelerator cavities and many other auxiliary components. The GRT is suspended via three vertical posts from the top of the outer vessel (of which only one is indicated in the figure). These posts provide also the mechanical support for all the other components of the cold mass, such as thermal shields, super-insulation (not drawn) and cryogenics-tubing. The insulation materials and pipes contribute to the weight of the cold mass. Nevertheless due to their rather small individual masses and the multiple, equally distributed supports they are not considered as critical in term of weakness with respect to inertial forces.

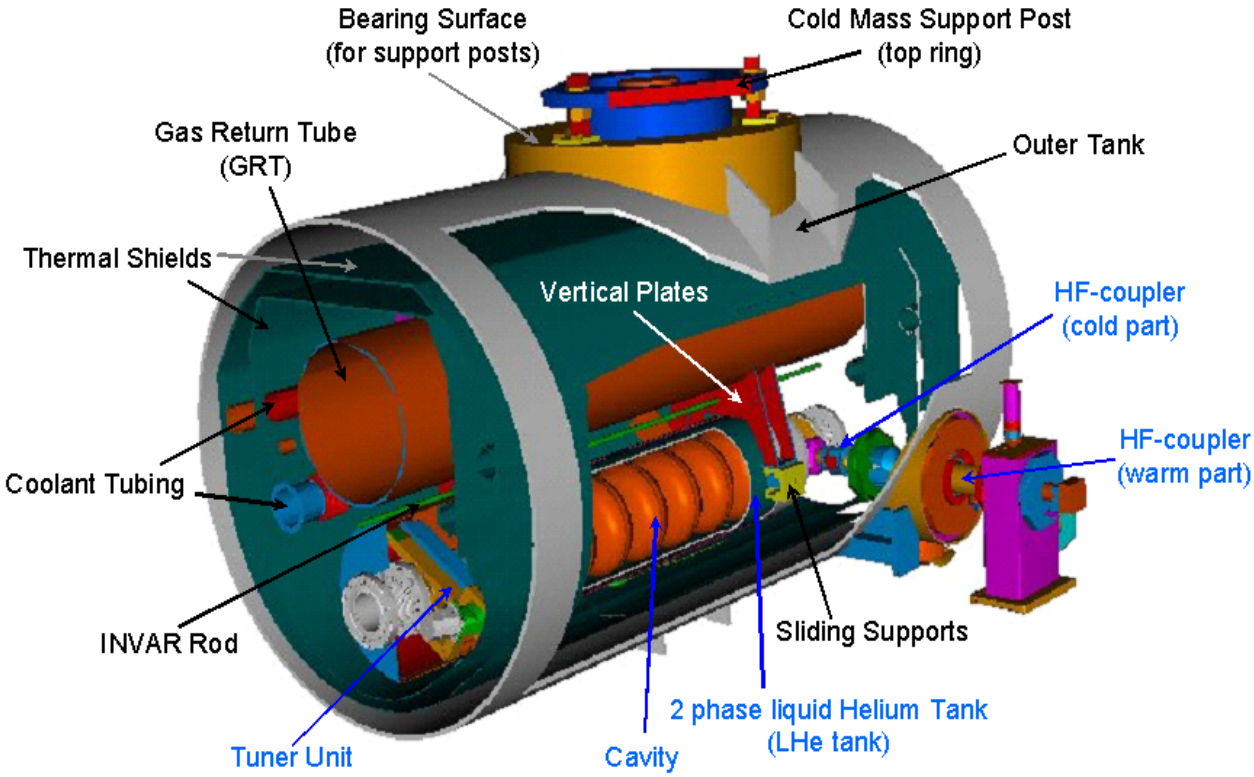


**Fig. 2.1: Sectioned View of an XFEL Cryomodule.**

**The various components and their respective dependency are explained in the text.**

In each XFEL cryomodule eight superconducting SRF-cavities are lined up axially together with a quadrupole-magnet and a beam position monitor unit (BPM) to form a *string*. Each cavity is enclosed in its own superfluid-Helium vessel and connected within the string through a flexible bellow. The distance between each unit is kept constant by means of an INVAR rod, a material with an extremely small thermal expansion coefficient.

Figure 2.2 displays in more detail the connection of the cavity assembly to the cold mass. Since the final position of each unit has to be adjustable, no fixed fixture position on the INVAR-rod can be pre-determined. After their alignment, the cavities are clamped to the rod via a pin which is welded to the top of the cavity He-tank. Additional four support lugs are welded to the helium vessel. They are used for the vertical and lateral suspension. Through a sliding support system the lugs are attached to vertical plates, which in turn are welded to the gas return tube (not drawn).

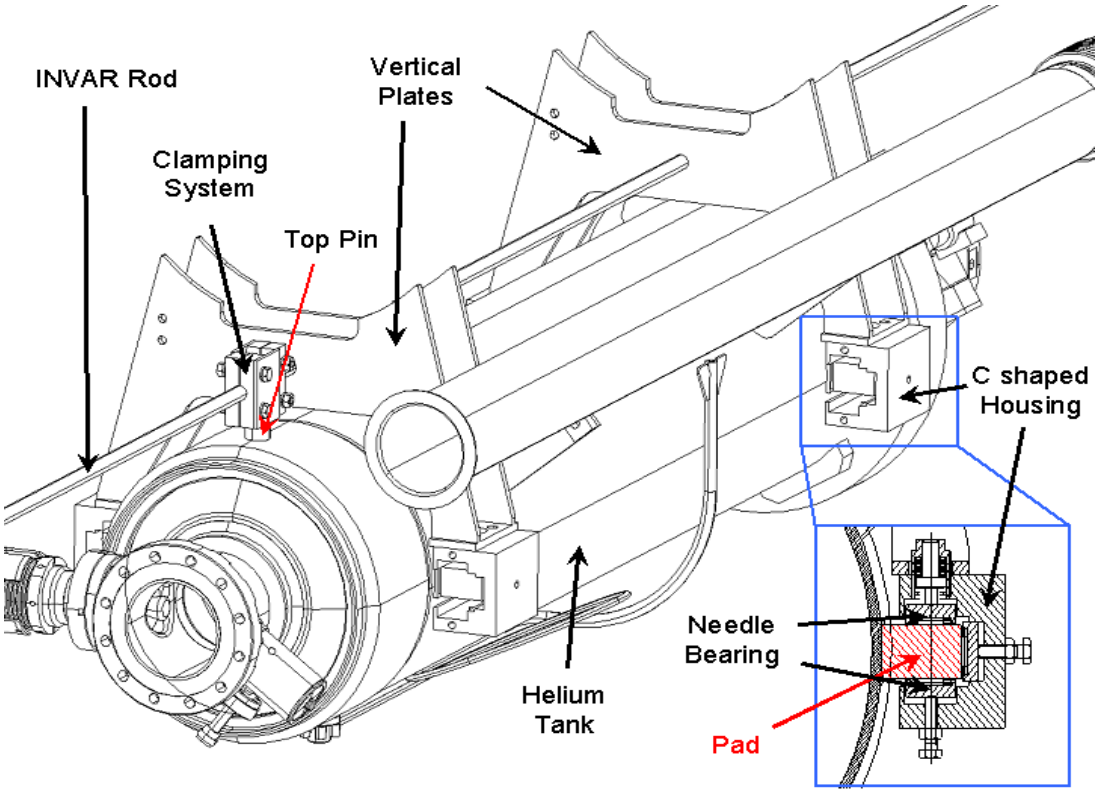


**Fig. 2.2: Schematic overview of an individual cavity and details of its support system.**

**The horizontal support is linked through four needle bearings and the vertical plates to the GRT. The axial positioning is accomplished by clamping the pin at the top of the helium vessel to the INVAR-rod. For more details, see text.**

Each sliding support consists of a set of needle bearings and allows for an axial movement of the lug with respect to the vertical plate, while it remains vertically and laterally fixed. Vertical and lateral components of external forces act on the support lugs, while the axial component is assumed to be transmitted through the top pin only.

The He-tank is made out of Titanium, hence considered infinitely rigid and stiff for the further calculations and considerations. The niobium cavities, which are welded at their both ends to the tank, must be kept within the nominal shape in order to work properly; hence deformations must be avoided as much as possible. The cavity/He-vessel system is analyzed in more detail in a later section. Special devotion is also given to the Input-coupler system which consists, amongst many others, of flexible parts. Hence, the rigid antennas which are inserted into the cavities are to some extent free to move with all the dangerous implications.

## 2.2. Orientation and Coordinate System

A definition of the standard coordinate system for the cryomodule is described in this paragraph. The long axis of the cryomodule, corresponding to the nominal beam axis, defines the z-axis of the coordinate-system. The y-axis is parallel to the posts axis and the x-axis is parallel to the coupler units axis as they stick into the cavities. Figure 2.3 (below) describes in detail this coordinate system.

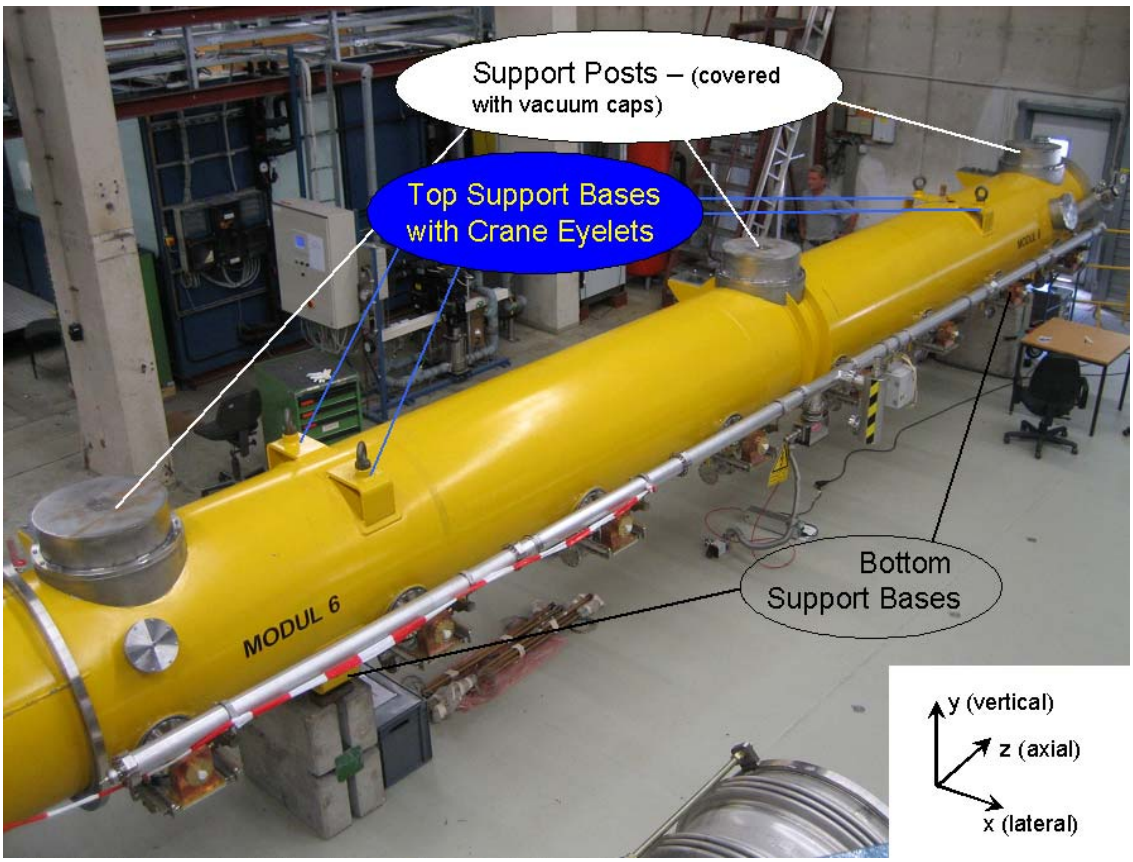


**Fig. 2.3: Picture of an XFEL cryomodule (the completed module 6).**

**Four crane eyelets are welded to the top of the module support base. At the bottom the vacuum vessel is equipped with similar bases for resting the module (in this case on concrete blocks). The three cold mass support posts are already covered with their respective vacuum lids. At the right bottom side the suggested convention for a coordinate system is displayed.**

Due to the intent of minimizing the heat leak, the design of the cryomodules shows a preferential direction in terms of gravitational forces. Only the three vertical support posts carry the entire inner structure, while providing the thermal separation and allowing for

shrinking during cool down. The present design of the cryomodule is obviously not driven by requirements on axial and lateral force components. Hence it's recommended that during transportation the accelerator module remains in the same orientation in which it was assembled and in which it will finally be operated. The module should not be laid on its side, rolled over or even been turned upright. The three posts which carry the cold mass should remain vertical and the coupler antennas should stick into the string transverse-horizontally to form together with the string axis the horizontal plane. (The two coordinate systems coincide: x=lateral, y=vertical, z=axial.) In view of the elongated shape of the cryomodule, the natural movement direction during ground- and air transport will be along the z-axis.

Temporary deviations from this recommended orientation as well as generation of horizontal force components are likely to happen during transportation and will be discussed in the respective sections.

## 2.3. Suspension and Support

The supports at the top of the outer tank (see fig. 2.3) used to fix the cryomodule to the ceiling of the accelerator tunnel, do look stiff and rugged enough and in the optimal position for lifting purpose without performing any detailed analysis of the statics of the system. Hence, any lifting fixture shall be designed to use these bases as connection joints, allowing at the same time to maintain the correct orientation of the module.

At the bottom of the cryomodule two support stands are welded to the tank. These are used for temporary support during assembly and transport. In the case of ground transportation by truck these structures shall be used. Further support points can be used, but the ones mentioned seem to be the more natural. Depending on the transportation choice, special care has to be taken to secure the module against tipping over.

Neither the total weight or size of the cryomodule nor the mass distribution incorporate special demands on an appropriate positioning and protection against unintended motion during transport. The maximum tolerable inertial forces and accelerations are of large interest, however. Therefore the study in hand focuses on the responses to inertial

forces, which act on the more critical, vital and partly movable components in the inside of the module.

# 3. Cold Mass Support System

Given its material and its thickness, the outer tank can be considered free of deformations at all times. Hence compared to all the other components of the module, it shall be considered absolutely stiff and incompressible. All external stimulations and shocks are directly (without damping) transferred to any other point of the module, in particular to the supporting surfaces which bear the cold mass support posts. When considering the vertical component of the external forces, the three posts are clearly the critical path for transmission to the cold mass.

## 3.1. Vertical Direction

The vertical direction requires a special analysis, since each component of the cryomodule is subject to a vertical strain at all times due to gravity. For a cryomodule at rest (or in straight and uniform motion) the only but least acceleration is due to gravity: $a_{vert}$ = 1 g ≈ 10 $m/s^2$. In addition to this continuous load, inertial forces stemming from temporal accelerations during movement are expected to show their main effect in vertical direction with higher strength than the gravitational force. Among others, during the final touch down following crane manoeuvres, the shock-acceleration and the corresponding forces might be very large, depending on the speed of the load and the hardness of the pavement. During 'regular' horizontal transportation, vertical accelerations are to be considered to occur frequently as well. For air-transport, take-off and landing are the critical phases. Finally in the case of marine transport vertical forces depend on many unforeseeable conditions such as the roughness of the sea. Overall at the end, the largest inertial force will occur most likely during crane movements while loading and unshipping. During overland-transportation (train or truck) inevitable unevenness of the ground translates into vertical accelerations.

Provided that the vertical orientation can be kept, forces due to gravity show only a y-component. In particular the weight load of the inner structures is purely along the axis of the post. No lateral components are present, which might cause bending or torsion within the posts. (This is one main reason for the recommendation to keep this orientation.) In the following analysis of the support-system it shall be anticipated that all vertical loading act purely along the y axis, hence is conveyed along the axis of the post.

Each of the two sliding support posts at the ends of the module sit on two massive (M30) screws which can slide on bearing surfaces (see fig. 3.1). The central post is equipped with three screws which fix its position. Hence, there are in total 7 screws M30 to carry the cold mass including the weight of the three posts themselves. All vertical force components are transmitted through these screws.

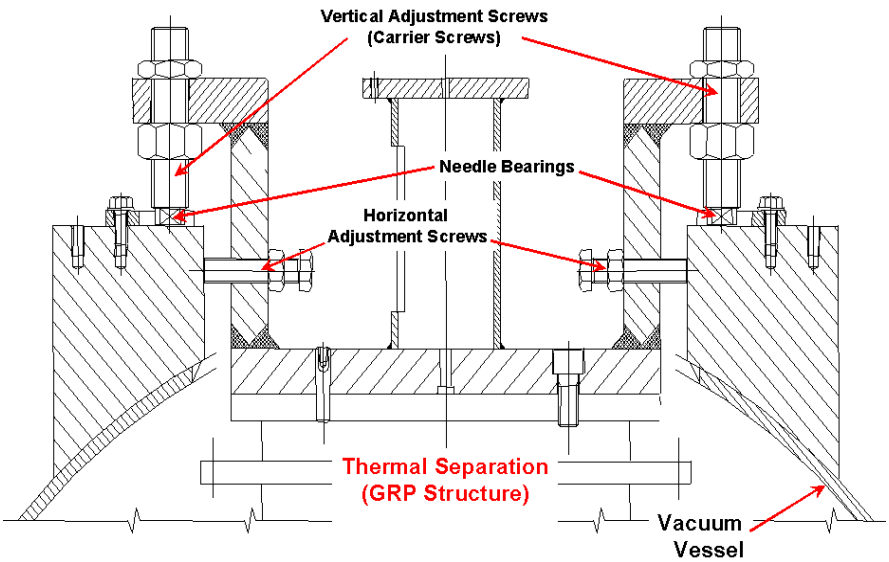


**Fig. 3.1: Cross section of the top part of a sliding support post.**

**The two posts at either end of the module, rest via two (per each) M30 screws on sliding support-bases. The sliding feature is obtained by using needle bearings, which in turn are firmly attached to the actual bearing area of the vacuum vessel. The connection to the cold mass is obtained by means of a thermally well insulating structure. The cold mass can be aligned with respect to the vacuum vessel by means of the adjustment screws.**

The weight of the entire cryomodule is approximately 7900 kg of which 3550 kg is the mass of the outer vacuum vessel. In the following analysis the weight of the cold mass together with the three posts is assumed to be $m_{CM}$ = 4.3 t. Hence, for a module at rest the total vertical force component

$$F_y = a_y \cdot m_{CM}$$

is $F_y$ = 43 kN. The screws, nuts and structural parts of the support-post assembly are believed to easily resist a multiple of this load.

### Needle Bearings

It is recommended, however, to check the maximum allowed force on the needle bearings and their seats. Such an examination is important since the deterioration of these components would most likely become evident only during the first cool down of the system resulting in a possible serious damage of the cold mass.

The worst-case assumption of only three support screws loaded is used to estimate the maximum foreseen load of the needle bearings. Hence, a needle bearing has to withstand a maximum force of

$$F_{max} = a_{y,\,max} \cdot \tfrac{1}{3}\, m_{CM}\,,$$

which is 14.3 kN for a module at rest. The maximum tolerable vertical acceleration of the entire cryomodule $a_{y,\,max}$ is yet to be determined (see the analysis of the coupler sub-system). (If e.g. $a_{y,\,max}$ = 2 g, the maximal force on a bearing would be $F_{NB,max} \approx$ 28.7 kN.) It is assumed, at this point, that the needle bearings are not the limiting component in view of $a_{y,\,max}$. This has to be proven, however. In case they are not sufficiently rugged, their layout should be changed accordingly.

### Thermal Separation Structure (fibreglass reinforced plastic - GRP)

A detailed analysis must be as well performed on the assembly group linking the room-temperature part of the support post and the different stages of the cold mass. In order to minimize the heat leak, some parts are made out of GRP (fibreglass reinforced plastic). Similarly to the case of the needle bearings, this component is by far not the weakest part of the assembly. However if this component is considered critical, the best option would be to obtain experimental data on the whole assembly rather than perform simulations of the single components. In fact the number of elements and their variable position make an accurate estimation possible only by measurement.

A numerical approach would also have to focus on the system as a whole. A good representation can only be achieved by a carefully elaborated finite-element model of the thermal separation part including all its components. This effort is too large for answering the only question: “What breaks first and under which force?” In view of the transportation of more than 100 XFEL cryomodules it seems worthwhile to sacrifice one representative GRP sub-assembly to determine its overall tensile strength in a destructive test.

### Vertical Force Propagation

All parts and subassemblies of the support system which provide the mechanical link between the string and the outer tank are made of rigid material. There are no springs or

damping elements present. The value for the real damping factor depends on many details of the assembly, such as tightness of all screws, joints and probably on the position of the adjustment screws. Even if the effort would be made and the damping would be determined, the respective value could not be considered as a figure of general validity.

Since by neglecting the damping factors one automatically considers the worst case scenario, it is a safe assumption to consider the full transmission of shocks from the outer vessel to the cold mass during calculations.

The same assumption holds for the GR tube. Thanks to its shape, material and wall thickness this is one of the stiffest components within the module. In the regime of regular transport-accelerations (and forces resulting from it) it can be assumed as infinitely rigid and incompressible. As well as for the case of the outer tank, any shock or force is directly transmitted to any other point; in particular to the zones, where the vertical plates (reaching to the cavity support lugs) are welded to the GR tube. Since these plates are designed to be the supporting joint, one can assume that they can also transmit vertical forces with no damping or deformation.

An infinitely rigid link between the bearing surfaces on the outer vessel and the support pads at the Cavity/He-vessel is in conclusion assumed for the force propagation in y-direction. The weakest components of the assembly are considered the needle bearing and the thermal separation made out of reinforced fibreglass plastic.

The response of the more critical parts (cavity and coupler) to vertical accelerations will be discussed in detail in the respective chapters.

## 3.2. Acceleration in the Horizontal Plane

The cold mass/post system is mechanically connected to the outer tank through the *horizontal* adjustment screws, which are (together with the vertical ones) used for the alignment of the cold mass. In figure 3.2 a schematic overview of the distribution of the screws is shown. The posts at both ends of the module have to be free to slide towards the centre, when the cold mass contracts due to cool down (indicated in blue colour). The

direction of the adjustment screws has to be purely lateral. Only the central post is fixed in the axial direction by means of its three horizontal adjustment screws. Assuming that these screws are sufficiently tightened and that the top of the central post remains axially fixed, all inertial forces due to axial accelerations would stress this very post. Since no reliable data are available regarding the maximum tolerable bending load for the GRP-structure, the central post is considered critical; especially in the axial degree of freedom.

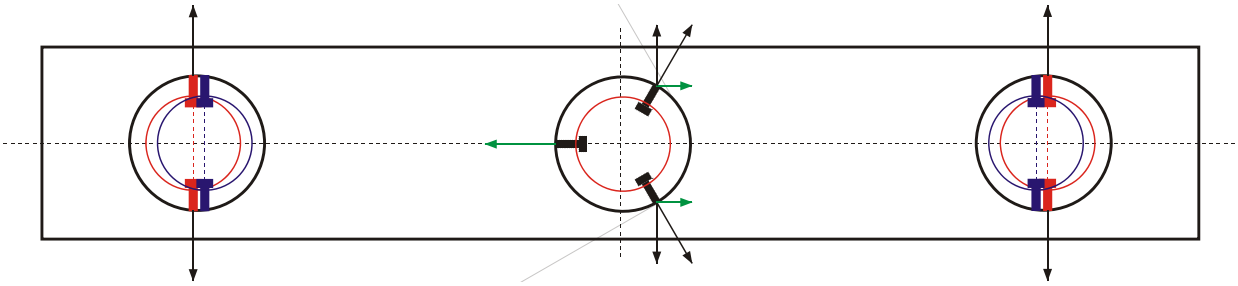

**Fig. 3.2: Schematic overview of the horizontal adjustment screw-configuration.**

**The seven horizontal adjustment screws are distributed over the three posts as indicated. The positions of the sliding posts after cool-down are indicated in blue. Since they are supposed to move axially, their respective screws can only point sideways. Axial force components can only propagate through the three horizontal adjustment screws of the central post (green arrows).**

In the lateral direction the cold mass is fixed by means of the horizontal adjustment screws only, which is not optimal. Similarly to the axial case a lateral acceleration would cause the bending of the posts, provided that the screws at the top of the post remain tightened. Ideally all three post share the lateral bending in equal parts. However, an exact value for a non-critical lateral acceleration cannot be evaluated at present.

In addition to lateral bending, the cold mass/post system might act like a pendulum since the supporting points lie considerably higher than the centre of mass. Whether the system can tilt as indicated in fig. 3.3 (left) depends on the lateral distance between the upper bearing point and the axis of centre of mass and the respective vertical distance; i.e. the length of the pendulum. A tilt becomes less likely, when the centre of mass is artificially lifted, e.g. by putting additional weight onto the top of the post. For the present design the centre of mass is roughly estimated to be not much higher than the INVAR-rod axis. The horizontal adjustment-screws are not capable to block or inhibit such a tilt. Only the friction force between their tips and the surface to which they are pressed exerts an additional resistance. (It shall be mentioned that most of the screws in question are made

to travel during cool-down.). The lift-off of one or more of the support-screws has to be considered destructive as well.

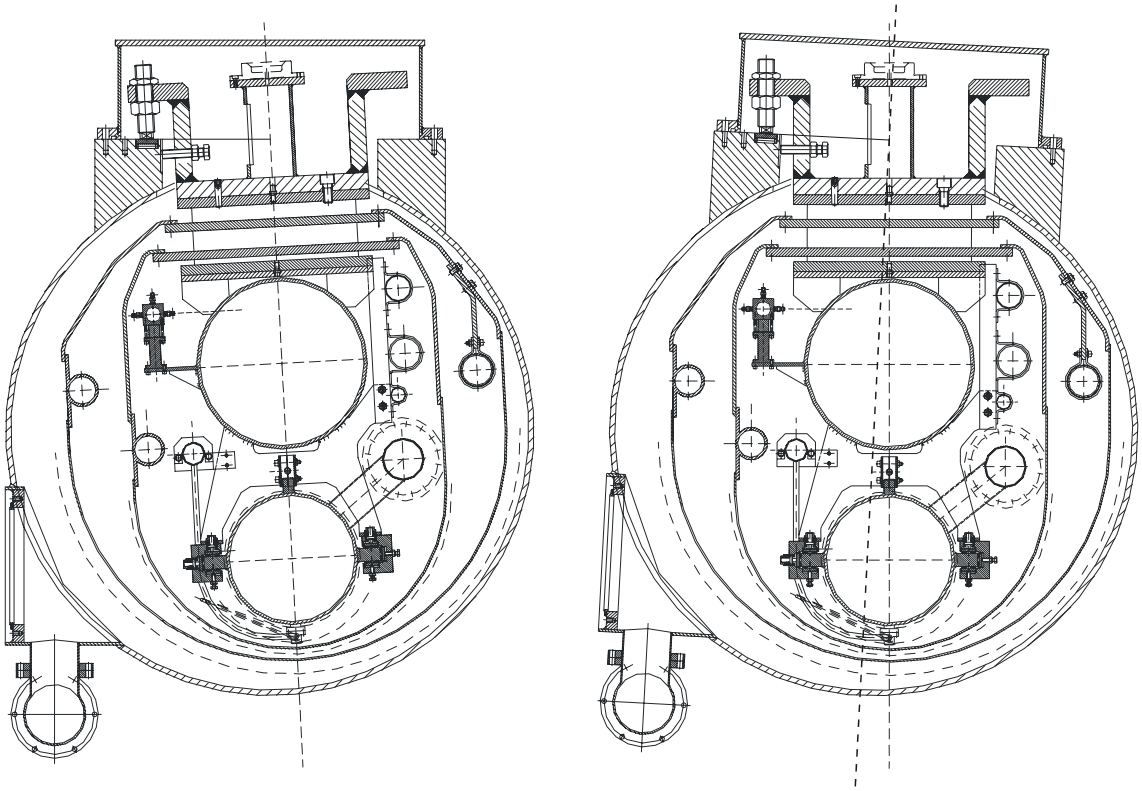

**Fig. 3.3: Sectioned view reflecting a tilt of the cold mass/post system with respect to the outer tank. Depending on the strength of a possible lateral force, the cold mass might tilt like indicated on the left figure. A similar motion might occur, in case the cryomodule is tilted as a whole, e.g. in consequence of an inclination of the transport vehicle (right sketch). Note: The right figure is unrealistic and displayed only to explain the case.**

The following drop back on their bearings causes very large and widely incalculable forces.

The deceleration (and the momentum transfer) occurs in a short time interval, which is governed by the short distance of compression of the screw pitching back onto its bearing.

The tilting case and its destructive consequences must be considered as a likely condition to happen. For air- and sea shipment large inclinations of the cryomodule are foreseeable and for transportation on trucks such movements can't be excluded, either. If the top of the post remains fixed (unlike in the figure) the GRP-structure is bent by the

resulting x-components of the gravitational force. The same circumstances apply as if direct lateral forces are present. The tilt-angle, at which some of the vertical adjustment screws are lifted off from their bearing surfaces, depends on the horizontal and vertical distance of the centre of mass to the outermost suspension point.

The disastrous loss of contact between the support screws and their bearings will also occur (at least theoretically) during downward accelerations of

$a_y \geq 1$ g,

where g is the acceleration due to gravity (g ≈ 10 $\mathrm{m/s^2}$). No transportation-scenario is conceivable, in which the vacuum vessel is accelerated stronger than the cold mass system. In worst case both of them just drop. In such an indifferent situation, a case of lift-off might occur.

The support system is optimized to serve well the demands from the point of view of adjustability, thermal insulation and compression. In terms of inertial forces acting on the inner systems of the cryomodule the sliding and dangling character of the support mechanism is less optimal.

Overall it seems advisable, that during transport the group consisting of cold mass and support posts has to be attached to the outer tank more firmly. To avoid lift-off, one could think of fixing the top-parts of the posts down to the tank by means of clamps, which can be removed after delivery. A second possibility consists in attaching both ends of the GRT to the front-ends of the tank. This can be accomplished by inserting at each end a large spigot into the GRT which can be bolted to the front-end-flange of the vacuum vessel. Dedicated transport caps can fulfil this purpose. In chapter 6 the layout and a draft design of such a transport cap is introduced.

Once the GRT as main structural component of the cold mass is fixed at both ends, the above discussed modes of movement are widely blocked. Besides inhibiting upward and lateral *motions*, the transport caps would participate in additionally suspending the GRT. The bending-strain on the posts would be almost completely compensated, and the loading on the horizontal adjustment screws considerably reduced. Only the rotation around the symmetry-axis of the GRT would exert small residual force components in x-direction within the posts. Furthermore the problem of weak suspension along the axial degree of freedom would be solved by designing the transport caps sufficiently rugged.

A pair of transport caps (as e.g. suggested in chapter 6) is considered to solve the critical issues in terms of horizontal force components within the cold mass support system. In the following it is assumed that the GRT is fixed to the outer vessel tightly enough to derive the following consequences:

1.) All components which participate in connecting the GRT to the outer vacuum vessel are safe in the sense that they don't play a limiting role in the determination of the maximum tolerable acceleration.

2.) The GRT is henceforth treated as the origin of force propagation, taking this role from the outer vacuum vessel. External forces (acting on the tank) are from now on treated as being transferred directly to the GRT. The simplification that damping is neglected is necessary and meaningful, because it represents the worst case for the inner parts.

## 3.3. Cavity-String under Inertial Forces

The next component in the stress progression path towards the cavities are the vertical plates, which link the individual cavity-systems to the GRT. Four plates exist per each cavity system (see fig. 2.2). These plates are welded at their top to the GRT while a needle bearing system is present at the bottom. A c-shaped housing with spring loading helps maintaining a firm connection to the support lugs of the He vessels of the cavities. By means of this fixture, the cavities are considered to be stiffly fixed to the GRT both vertically and laterally. All the components (vertical plates, including their welds, C-structure, screws and bearings) are stable and rugged enough to withstand a multiple value of the anticipated forces.

The cavities dressed in their helium vessel (cavity system) are axially free to move with respect to the GRT. The individual cavity systems are considered to be independent from each other. Nevertheless they are mechanically linked by means of an INVAR-rod which is joined to a pin present at the top of each He-tank by means of a fastened fixture. The strength of these fixtures is not very well defined. Besides the torque applied to tighten the screws and the clamping depends on the surface features of the rod and the clamping pieces or whether grease is present and to which extent. A very coarse estimate yields to the consideration that the clamping capability of the existing fixture is



Created and released for publication by Babcock Noell GmbH. DRAFT Version

reliable for accelerations of approximately 1 g. The addition of tensioning elements (as suggested in chapter 6) is advised. This would allow reaching higher reproducibility and stronger linkage.

More critical than the clamping of the individual He vessels is the axial joint of the INVAR rod to the vertical plate located in the middle of the module, underneath the central post. This is the only fixture capable of conveying the inertial forces stemming from an axial acceleration to the assembly consisting of eight cavities (most likely the quadrupole magnet) and the INVAR rod.

The clamping system is in size and strength similar to those which connect the He vessels to the rod although the force to be transmitted is more than eight times higher. In the case the quadrupole magnet is attached to the rod as well, the inertial force on the clamping becomes even larger (≈ a ten-fold of the one for a single cavity). The maximum tolerable axial acceleration is very small (0.1 g) and lies below values which are typically foreseeable during transportation (e.g. a regular breaking manoeuvre of a truck).

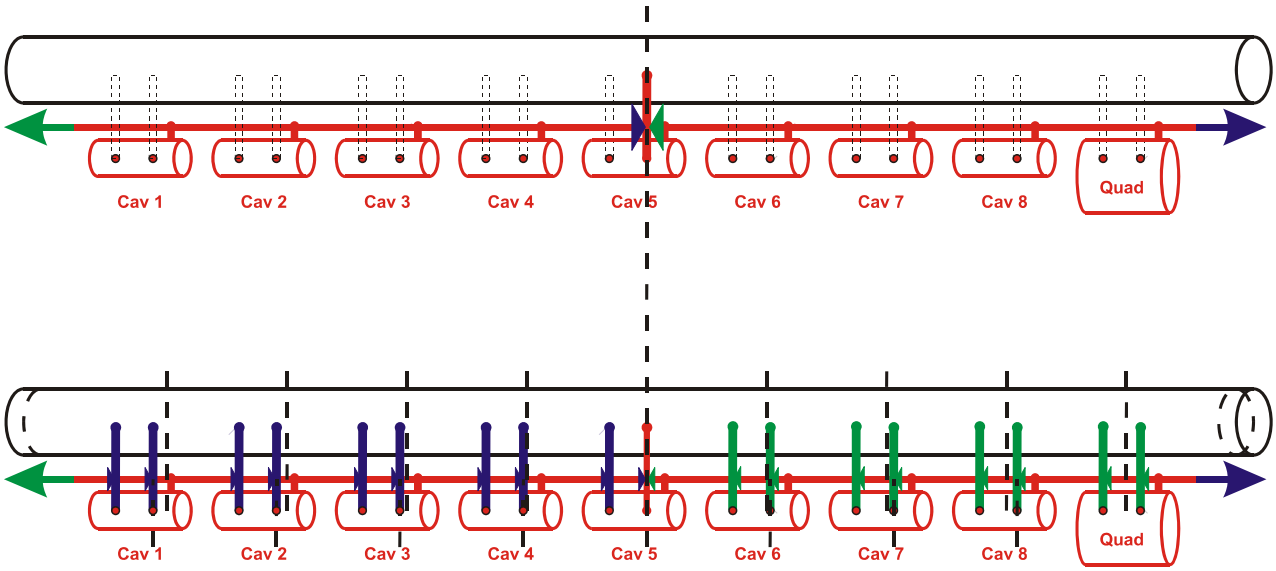


**Fig. 3.4: Schematic view of the string under axial acceleration.**

**The string-rod-assembly is axially attached to the central vertical plate (top). The clamps are displayed as coloured triangles. The whole inertial force is conveyed through one clamp and one plate only. For many, equally distributed clamps (bottom) the load is shared and the individual strain on one clamping (plate) is smaller by a factor of 9 (green case) or 10 (blue). To allow for later contraction, the fixtures have to be arranged as drawn.**

It seems advisable to distribute the inertial force to a larger number of vertical plates, as indicated in the schematic shown in figure 3.4. By doing so, not only the loading on each clamp is considerably reduced but the strain on the vertical plates and especially their welding seams is much better distributed as well. Care has to be taken to place the clamps on the proper side of each vertical plate. Since the GRT contracts more than the INVAR during cool-down, the vertical plates have to move towards the centre of the module, as drawn in dashed lines in fig. 3.4. Hence the clamps are supposed to be on the respective outward side with the implication that the mechanical loading on all of the sections of the rod is primarily extending and practically not compressing. Hence, the invar-rod would not be subject to buckling.

In the case of a single fixture the buckling stability would be critical; especially along the section between the heavy quadrupole and the central plate. In such a case the transport direction (on a truck) should be with the quadrupole ahead. During a breaking manoeuvre the deceleration of a truck is typically much larger (up to 8.6 $m/s^2$ [*]) than its acceleration capability (3.7 $m/s^2$ [*]). (The case for a braking vehicle is displayed in blue in fig. 3.4). If multiple clamping is applied, the orientation is widely irrelevant. The optimal orientation, however, would place the quadrupole to the rear, because the stronger forces during braking (now the green case) are transferred to the GRT in a more direct way.

For a multiple clamping scenario as suggested in fig 3.4 it is of vital importance, that a considerable temperature-increase (resulting in an expansion of the GRT with respect to the INVAR) after the attachment of all clamps has to be avoided at all times after the assembly is completed. If such a temperature increase cannot be excluded, the multiple clamping-scenario is not advisable.

It seems feasible to design the central clamping (which links the string-INVAR-system to the GRT) sufficiently rugged to withstand axial accelerations up to 2 g. The welding seams which fix the vertical plate in charge to the GRT, has to be reviewed accordingly and reinforced with cross-bracings if necessary. The remaining problem of buckling of the INVAR-rod could be solved (if found necessary) by applying a pre-strain on both ends of the rod during transportation. This could be achieved by attaching the rod to the transportation-caps with help of another pair of the mentioned clamping units (chapter 6).

---

[*] Values from a systematic investigation during the transport of 416 superconducting dipole-magnets for the LHC project.

The strain could be provided by appropriate screws in the transportation-caps. Depending on the transportation scenario for the modules and the possibility of an intermediate storage period, a very large number of transport caps might become necessary while the strain level on the invar-rods has to be established in a reliable and continuous manner over an extended period of time.

In view of all the additional effort (reinforcement of welding seams, larger but fewer clamping systems, possible buckling – thicker invar-rod or pre-strain) another possibility might be considered: a multiple clamping scenario active only at temperatures which are considerably higher than values which are reachable during production for the cryomodule (e.g. 80°C). During assembly the clamping devices are attached to the invar-rod in such a way that each of them shows a well defined gap to the respective vertical plate. The gaps are larger the further they are away from the central plate, where the clamping is tight. If the system gets heated, the GRT expands more than the invar and the gaps close up. At the target temperature all gaps disappear and all clamps are tight to their respective vertical plates. The multiple clamping-scenario is in power and works as described with all its positive implications on stability and safety, as long as the required temperature is kept.

The most demanding and hence most dangerous transportation phase, as far as axial loadings are concerned, is between a manufacturer's site and DESY (most likely by truck). For this limited period of time (for which the manufacturer should be responsible anyway) the cryomodule could be deliberately heated and kept at a constant temperature. The inside volume of the cryomodule is closed by the transportation caps but not evacuated. A thermally simple, convection free situation should be feasible. Heating could be accomplished by conventional, reusable heating bands and thermal insulation jackets as they are employed in bake out-routines for ultra high vacuum-applications. The operational (i.e. transport) temperature could be monitored in various points by simple thermometers, which feed back the heating circuits and inhibit the continuation of the transport in case of a malfunction. Initial heating should be done at the starting point of the trip. The heaters shall be fed by electric power sources (e.g. batteries) which are most likely to be present anyways in order to drive the shock sensors and recorders as well as possible vacuum-pumps. In the case of marine or air transport (and any other scenario which can't be easily stopped) a redundant heating system has to be employed and the power sources need backups.

Depending on technical and economic boundary conditions one of the given scenarios (or possible combinations) can be chosen. In any case, the authors are confident that a protection of the structural parts against damage due to forces, as they have to be anticipated during transport manoeuvres, is feasible.

# 4. The Cavity System

The component of largest interest in terms of mechanical damage is the RF-cavity itself. The cavities are made of Niobium, which is a rather soft material compared to Titanium (He-vessel) and stainless steel (most of the supporting components of the cold mass). Furthermore, the elongated shape of a cavity and the fact that it is only supported at its ends, bears the risk of mechanical oscillation and resultant damages.

## 4.1. Damage

The critical pressure above which deformation of the material becomes irreversible depends very much on the temperature-treatment of the given part. For the X-FEL cavities the limit of the elastic regime was determined by DESY to be at 55 MPa. If the cavity is stressed in such a way that at any point or region the stress is larger than 55 MPa, the resulting deformation is irreversible and the part is considered as destroyed. A collision of the cavity (e.g. with the inner wall of the He-tank) as a result of a mechanical shock shall also be considered as damage-case.

An external stimulation acts firstly on the surrounding tank and is transmitted to the ends of the cavity. To analyse the resulting dynamic deformation and to figure out which part is most critical, the whole cavity-system has to be investigated. A complete examination becomes also necessary to determine the typical modes of excitation and the zones of largest stress. The areas of largest bending amplitude have to be identified as well, in order to provide reliable values for the maximum tolerable accelerations.

## 4.2. Description

In fig. 4.1 a ‘dressed cavity’-system is displayed. NbTi conical flanges (‘Bordscheiben) are welded to each end of a cavity. They are the mechanical link to the surrounding liquid He-tank. The liquid Helium is fed through a tube which runs parallel to the cavity string. The auxiliary components (tuner, coupler, etc) in terms of relevancy for this analysis will be discussed in the respective sections.

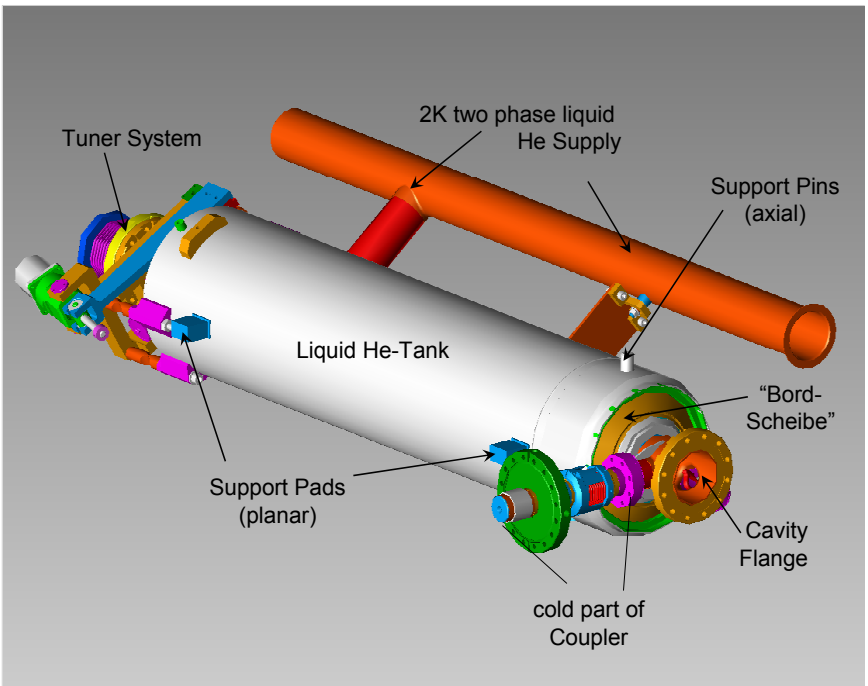


**Fig. 4.1: Overview of the cavity system.**

In one cryomodule eight cavity-systems are lined up to a ‘string’. The neighbouring cavies as well as LHe supply tubes are interconnected by flexible bellows, such that each

system can be aligned individually with respect to each other and with respect to the desired beam axis. It is anticipated that the bellows don't allow for the transmission of stress from one dressed cavity-system to the next. Hence, external mechanical stimulations enter a system only through its own supports; the four support lugs and the top pin.

The suspension is maintained by the four lugs which are welded to the outer surface of the He-tank. The axial positioning is maintained by means of a pin at the top of the tank. Neither the pins nor their welds (all titanium) are considered to be of critical weakness. The tubing system which contains and feeds the 2-phase liquid Helium into the cavity He-tank has no relevance for this investigation, too. Compared to the critical parts it is very rigid and all subcomponents are well-fixed.

In the final assembly a tuner unit will be attached to each cavity. By mechanically compressing or elongating the cavity in its axial direction the resonance frequency can be adjusted. At the tuner end the cavity is attached to the LHe tank via a compensator-bellow, which provides the necessary flexibility for shaping the cavity. The open end of the cavity is mechanically linked to the LHe-tank via the assembly consisting of the end bellows and the tuner.

## 4.3. FE-Modelling

In the following, the analysis is restricted to the actual "cavity-system" consisting of the Niobium structure, the two conical flanges ("Bordscheiben"), the compensation-bellows at one end of the cavity and the liquid–Helium tank. A 3-dimensional finite element (FE)-model of this system was generated utilizing the software package AnSys (see fig. 4.2).

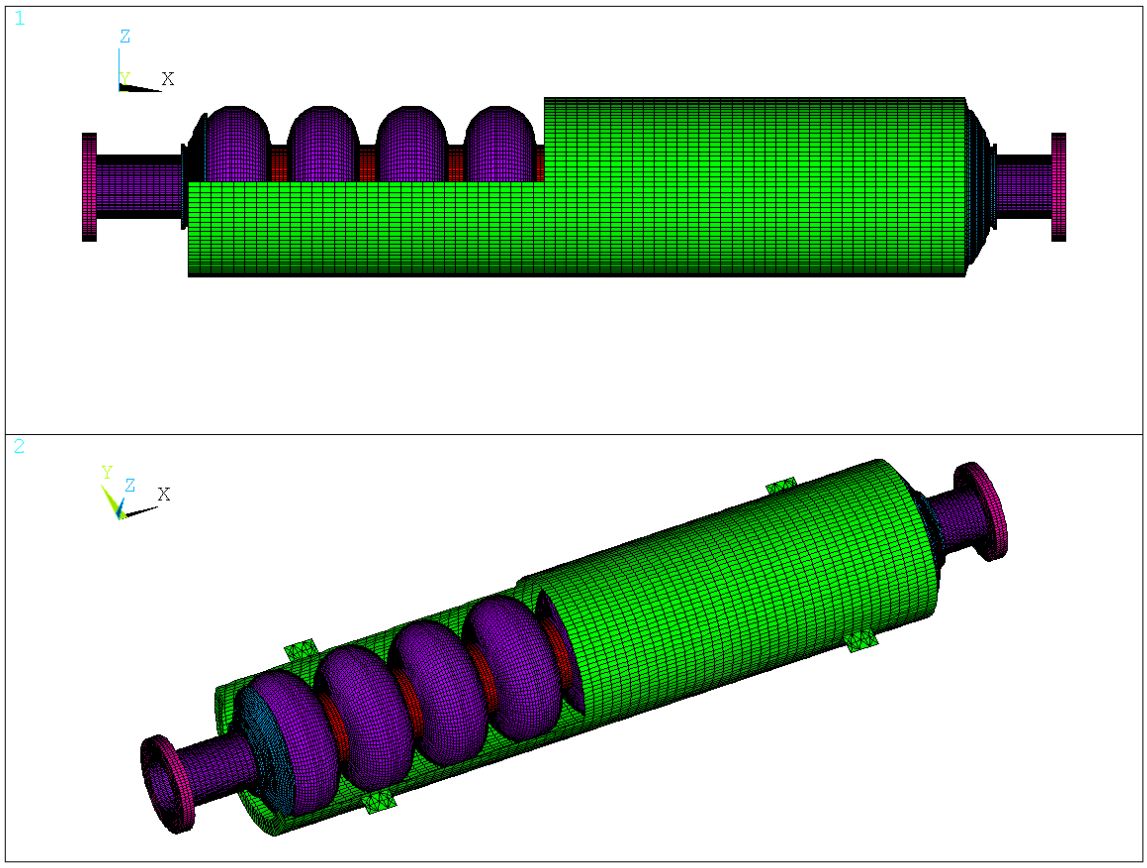


**Fig. 4.2: Sectioned view on the FE-model of the cavity system.**

**The model reflects the relevant components like the He tank, the conical flanges and the cavity. Auxiliary parts and the respective ports are not considered at this stage of the analysis.**

The surrounding tank is composed out of 8100 elements, and the cavity consists of 60500 elements. The conical flanges, which convey forces and possible shocks from the tank to the ends of the cavity, are represented by a system of about 9000 elements each (see fig. 4.3).

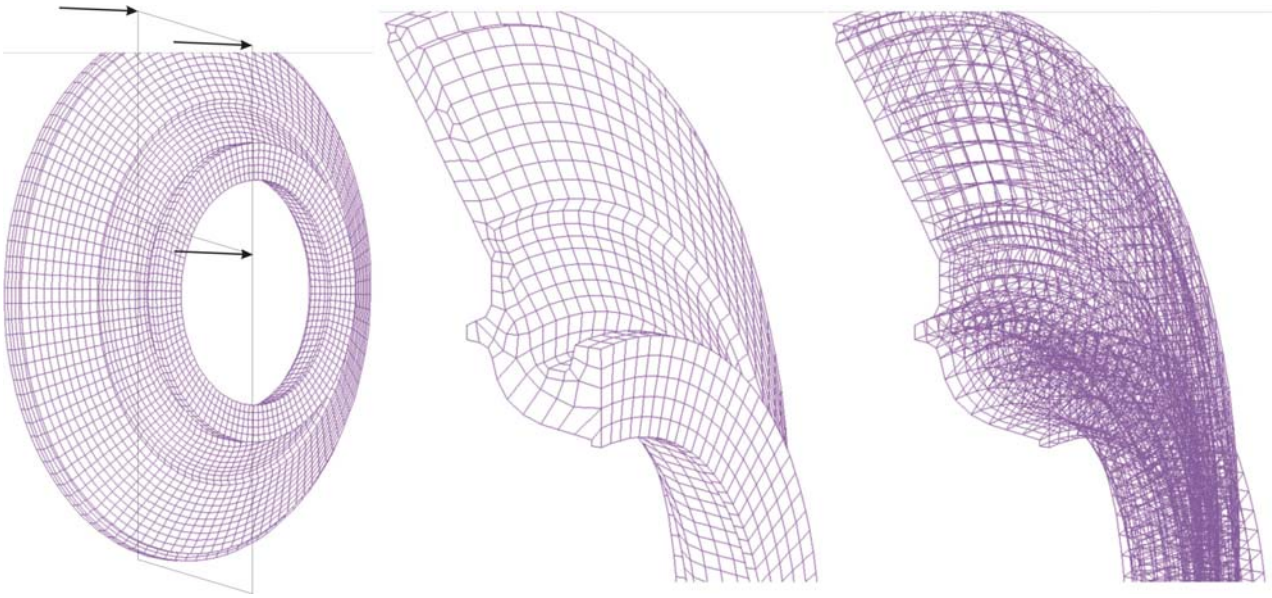

**Fig. 4.3: FE-Model of a Conical Flabes („Bordscheibe“).**

**The disc as a whole (left), cut-out section showing the surface mesh-elements (middle), and the same section displaying all elements. The ‘Bordscheibe’ is represented in the FE-Model by approximately 9000 elements.**

The chosen mesh numbers and densities are primarily a compromise between numerical accuracy and calculation time. One single processing duration (i.e. the determination of the system’s response on a stimulation of a given value and shape) is approximately 4 hours on a suitable state-of-the-art PC. The numerical accuracy is estimated to be much better than one percent. This is well below the anticipated inaccuracy due to the inevitable discrepancies between the model and the as-built structures.

### Compensator Bellows

A very important component, in view of shock transmission, is the compensator bellow which provides a flexible link between the He-tank and one end of the cavity. The presence of these bellows alters in general the characteristics of the transmission of external stimulations and forces to the cavity. The deformation-shape of the cavity as a result of external stimulation depends drastically on the mechanical properties of the bellow. Not only the shape under load but also the extent of deformation and the zones of highest stress depend on the stiffness of the bellows.

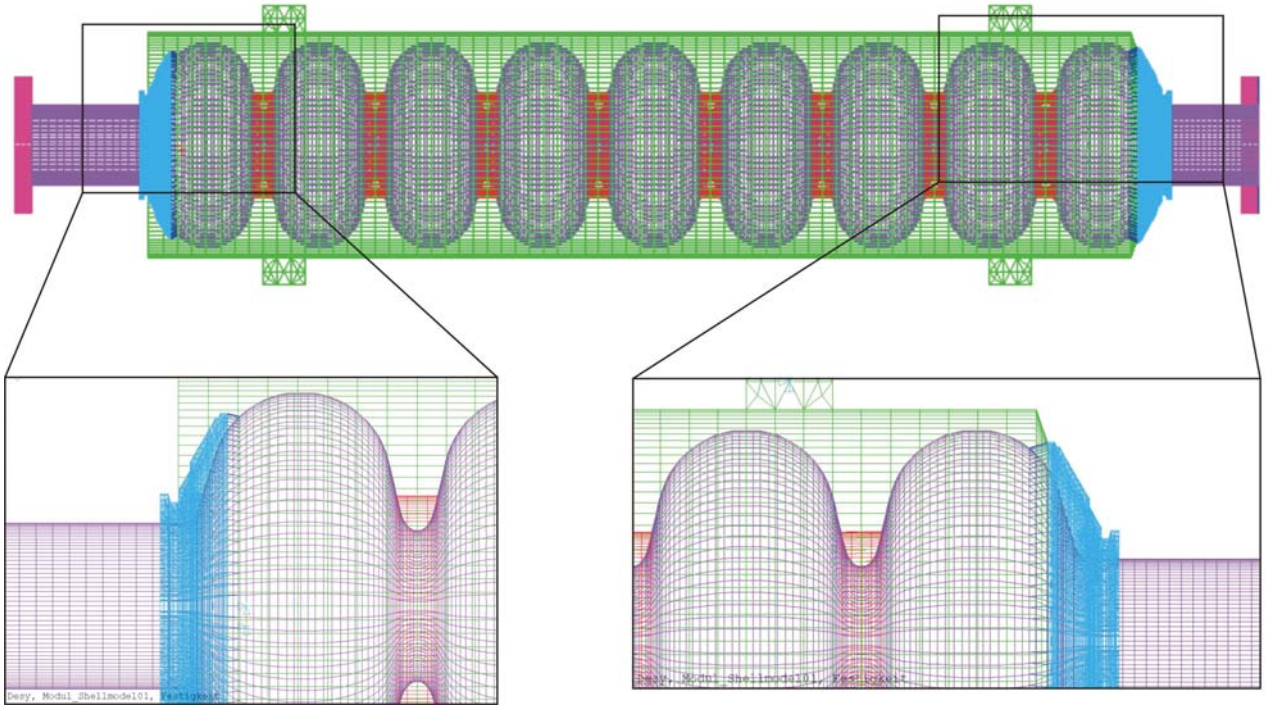

**Fig. 4.4: Transparent view of the FE-model of a cavity in its LHe-tank.**

**The end sections, which are relevant for considerations on force flow and shock transmission, are shown in more detail. At the left side the link between the He tank and the outer rim of the Bordscheibe is not present. For the calculations the bellow is represented by its potential mechanical characteristics (see text). (The direct lines between the Bordscheibe at the right side and the adjacent cavity half cell do not represent mechanical links. Their function is, to probe a possible mechanical contact between these two sub-components.)**

Furthermore this component might also be subject to destruction itself, in case its elasticity or other mechanical parameters are not adequate.

In order to perform a full representation as an FE-model one needs to determine the mechanical and geometrical characteristics of the bellows, such as spring constants and maximum tolerable deformation. In order to do so, many details are required. All the geometrical dimensions such as number of convolutions, bending radii and especially the wall thickness (and its deviation from the nominal value) are crucial parameters, which have a very strong influence on the mechanical behaviour. Furthermore all these features depend very strongly on the material properties and the part history, such as heating due to welding. All this summed make the assumption on the bellow properties very unreliable when trying to represent the part in an FE model. (A realistic simulation of the bellows

can be performed only in close cooperation with the manufacturer.) For the validity of the analysis it was found more reliable to represent this component by its mechanical properties.

The elasticity in axial direction was experimentally determined at DESY to be 410 N/mm. Regarding the lateral spring constants there are no reliable measurements available yet. The behaviour of the 'open' end (i.e. the end where bellow and tuner are located) is furthermore strongly determined by the presence and the status of the tuner unit. Since the stiffness of the end-bellows plays a key role for transport-safety a detailed analysis was made and the results will be given in the next sections. Likewise the role of the tuner will be discussed in the later respective section.

## 4.4. Calculations and Analysis

### Axial acceleration – evaluation recipe

In the following figures, which display cavities under inertial forces, all the deformations (elongations) are amplified to enhance the visualization. The colour code reflects stress values within the material. The coordinate system for all FE-models is (unlike the above given definition, but consistent within these section) such, that the cavity axis is the x-direction and the vertical axis is the z-coordinate. The tuner-end of the cavity is always on the left. Among the numbers listed within the figures, *DMX* is the maximum displacement in [mm] and *SMX* the maximum stress in [MPa]. The file name, given left below, contains the acceleration in units of g (≈ 10 $m/s^2$). The phrase "-1,0*gx" e.g. indicates an acceleration of 1 g along the negative x-axis. The accelerations are applied always to the support lugs on the LHe-tank.

The initial test consisted in accelerating the cavity system purely along the x-axis in both directions (parallel and anti-parallel) and with different acceleration strength to determine the zones of largest stress and the values of maximum deformation. The tuner is set to be loose for now ($K_{axial}$ = 410 N/mm and $K_{lateral}$ = 0 N/mm).

Fig. 4.5 shows the response of the cavity under an axial acceleration of 1g applied to the LHe-tank (suppressed in the figure). In the left picture the acceleration is along the

negative x-axis. Since the left end is comparably loose, the cavity gets compressed (with a maximum displacement of 0.05 mm). The zone of largest stress (which is in this case 2.2 MPa) is in the area of the iris closest to the fixed end. The right picture shows the case for the acceleration along the positive x-axis, which yields a stretching of the cavity. The numeric values for deformation and stress agree well for the two cases.

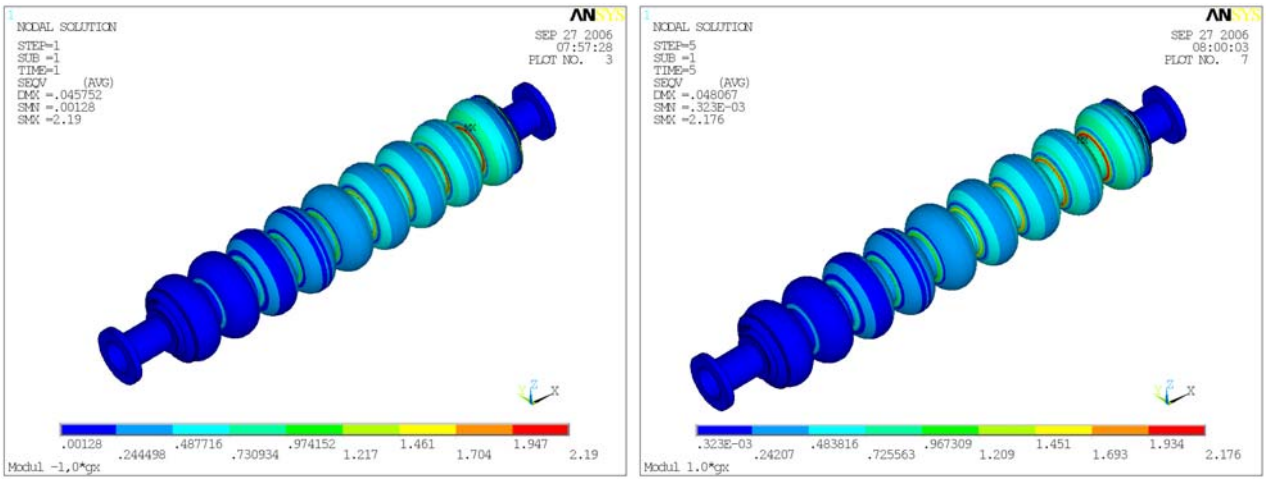


**Fig. 4.5: Compression of the cavity under an axial acceleration of 10 m/s$^2$.**

**The bellow (not drawn) is at the left bottom end of the cavity. The mechanical pressure is colour-coded and the maximum value is listed as *SMX* (2.2 MPa in the given cases). The maximum value for the displacement is listed as *DMX* (here 0.05 mm).**

**Left: The acceleration of the outer tank (suppressed in the drawing) goes along the negative x-direction, leading to a compression of the structure. Right: Acceleration along the positive x-axis.**

To gain further confidence in the results, additional calculations for different values of accelerations were performed and numerical figures for the mechanical stress were obtained. In fig. 4.6 the stress values are plotted vs. the axial acceleration. The value of 55 MPa, which was identified as the destruction limit for the Nb-cavity by DESY, is marked and the maximum tolerable (purely axial!) acceleration could be traced. It shall be noted that the calculated values show the anticipated linearity and symmetry of the system as indicated by the fitted lines.

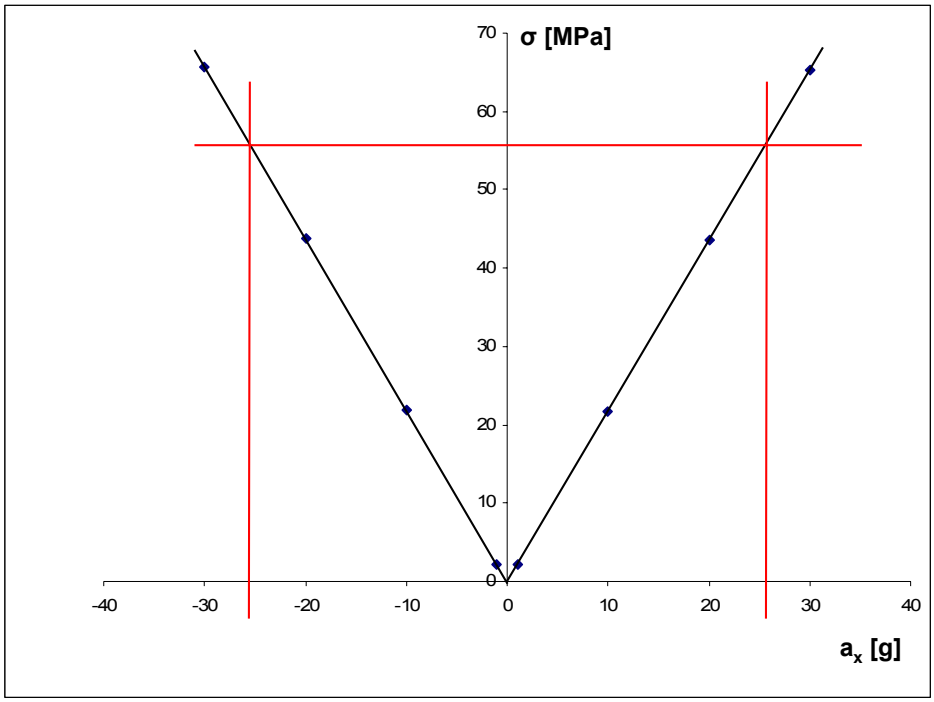


**Fig. 4.6: Maximum material stress as function of axial acceleration.**

**For different values of acceleration FE-calculations were processed and the value of maximum stress was determined. The pressure grows linearly with the inertial forces, like expected, and does not depend on the direction (co- or counter-axial).**

The determination of the critical acceleration follows the sketched recipe which is repeatedly applied during the following additional analysis:

- Repeat calculations for various accelerations.
- Check the zones of largest stress (deflection) for consistency.
- Plot values for largest stress (deflection) as function of the acceleration.
- Extrapolate and check for linearity.
- Determine the critical acceleration under which the material deforms plastically or components collide.

In the given example the axial component of the critical acceleration is derived to be: $a_x$= ± 28g. This should not yet lead to the derivation, that the cavity system resists axial shocks which are equivalent to 28 g. Additional issues have to be discussed before a concluding interpretation shall be given.

### Lateral shocks – a case study

Two extreme cases have to be considered: one in which the tuner bellow is very soft and the other in which it is very rigid. In figure 4.7 the deformation of the cavity is schematically displayed for the two scenarios. In the case the bellow is very soft or not present, the largest movement will occur at the open end. In the case this end is tightly fixed, the strongest displacement occurs at the middle of the cavity.

For a more quantitative classification of *soft* and *hard*, the lateral spring constant of the cavity structure itself can act as a scale. This value has been estimated from the FE-model. For a purely lateral displacement of the open end (both flange surfaces remain parallel to each other, as sketched in Fig. 4.5 below) a value of 2300 N/mm was obtained.

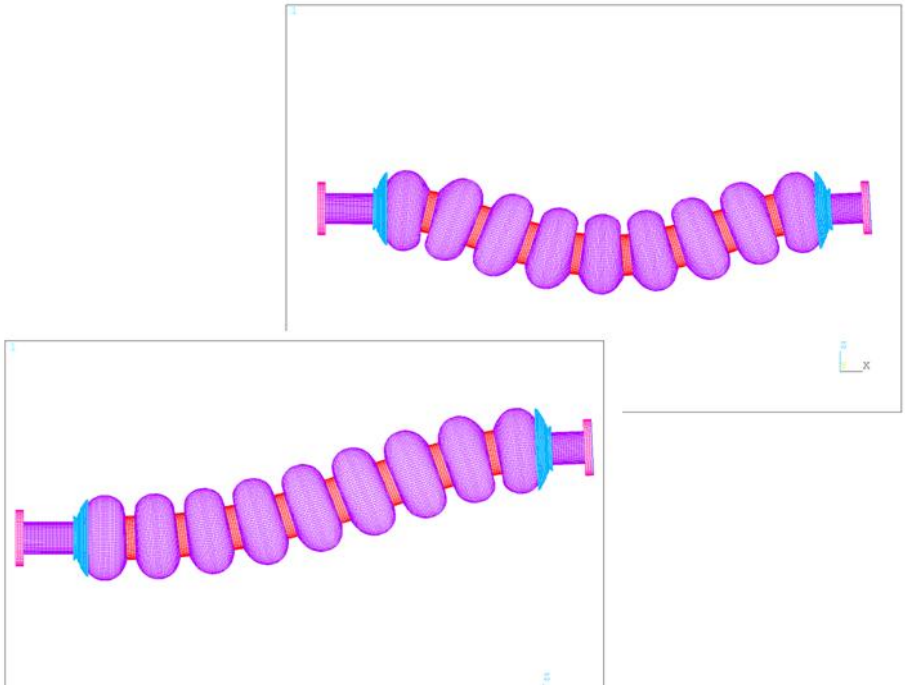

**Fig. 4.7: Deformation modes depending on the bellow´s properties.**

**The deformed shape of a cavity depends on the radial stiffness of the end bellow. If the bellow is very rigid the largest deflection occurs in the middle of the cavity (top picture).**

Calculations were performed for three sets of bellow-parameters.

Case 1: End-bellows laterally very soft:

$K_{axial}$ = 410 N/mm  $K_{lateral}$ = 0 N/mm

Case 2: End-bellows laterally very rigid:

$K_{axial}$ = 410 N/mm  $K_{lateral}$ = 410 000 N/mm

The value for the lateral spring constant can't be set to infinity for the calculations. It was arbitrarily chosen to be 1000 times larger than the value for the axial one. It is also considerably larger than the cavities lateral elasticity (= 2300 N/mm), hence in good approximation 'very hard'.

Case 3: End-bellows very rigid in both, radial and axial direction:

$K_{axial}$ = 410 000 N/mm  $K_{lateral}$ = 410 000 N/mm

This represents the case, that the ‚open' end of the cavity is firmly linked to the LHe-tank by means of the tuner, both in axial and lateral direction.

Fig. 4.8 displays a quantitative comparison of the cases 1 and 2 for a purely vertical acceleration of 2 g (1 g would reflect the situation of a cavity system at rest in the earth gravitational field). For no lateral support at the tuner end the deformation reaches almost 4 mm causing stress of more than 50 MPa. For a well-supported tuner-end the deflection is only 0.2 mm and the maximum stress is 8 MPa.

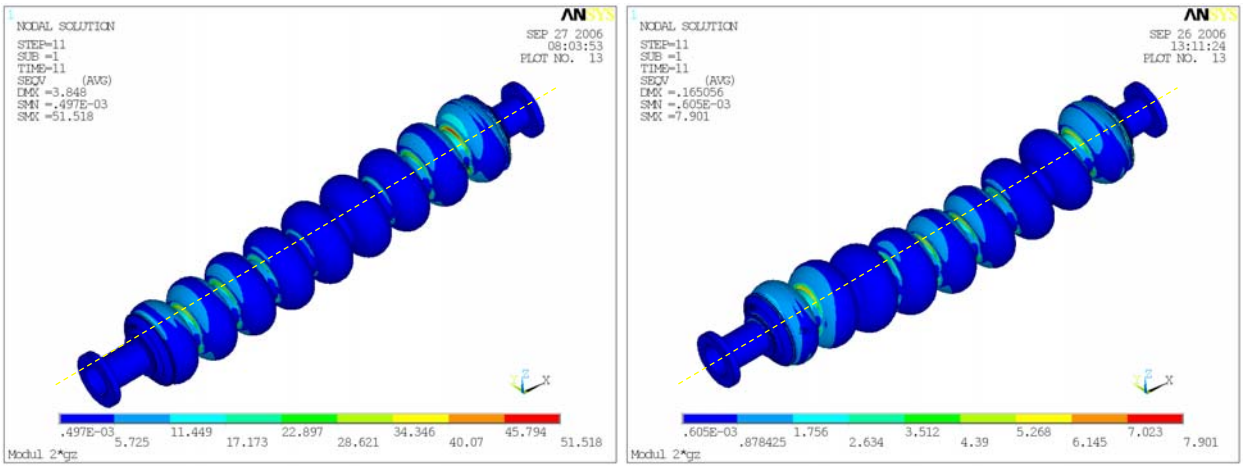


**Fig. 4.8: Deformation of the cavity under vertical load, two cases.**

As the cavity system suffers an acceleration of 2 g (gravitation plus another 10 m/s$^2$) the deflection at the open end is 3.8 mm for the case of a laterally soft bellow (left). In this situation the largest stress exceeds 50 MPa. In the case of laterally stiff bellow, the deformation is reduced to 0.2 mm and the maximum stress is 8 MPa.

In fig. 4.9 (left) the maximum stress and deformation are plotted as a function of the vertical acceleration component for the three cases. It is obvious that the cavity requires radial support at its tuner end, to allow for safe handling and transport.

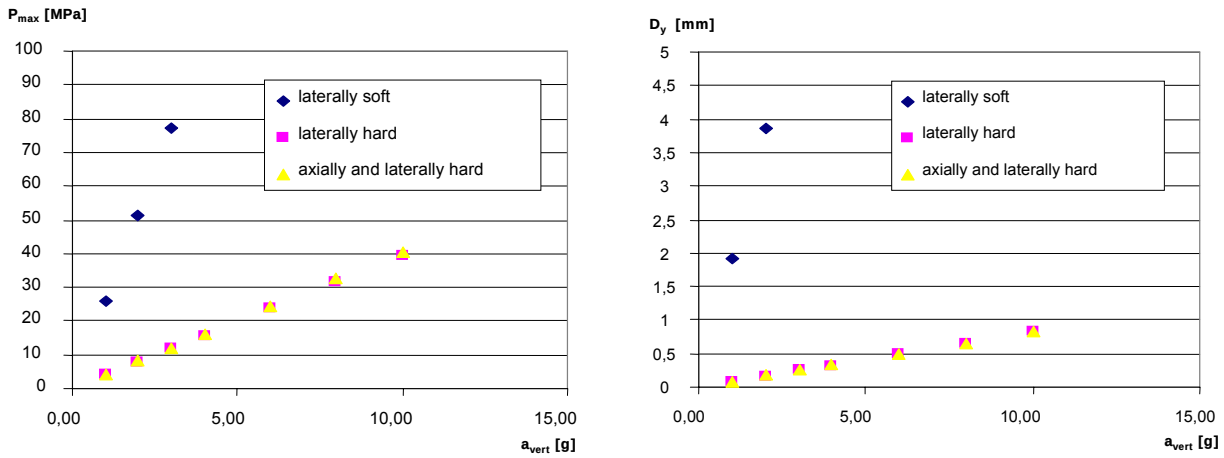


**Fig. 4.9: Maximum stress and deformation as function of vertical acceleration for the three analyzed cases.**

### Coupling of degrees of freedom

For an as-built system it can't be excluded that an initially pure *axia*l (e.g.) shock does not give rise to inertial forces which also show *radial* components. Such mixing of vectorial components becomes likely if the radial symmetry of the cavity system is not prefect. The fact for instance, that axial shocks enter the system through the top pin at the LHe-tank, whereas lateral and vertical excitations come through the support pads, violates the radial symmetry. (This is not well represented in the FE-simulation for reasons of simplicity of the model.)

In particular, a mixing of the degrees of freedom can't be ruled out within the whole cryomodule; making necessary the study of the general external excitation case (an arbitrary combination of accelerations from different directions) if one needs to exactly describe the failure limit of the full cryomodule system.

Nevertheless the method followed up to now of analysing the different directions individually allows providing upper limits for accelerations up to which transportation is safe. Hence our approach accounts for the lack of knowledge regarding the coupling between the degrees of freedom (of the coordinates) by including the following worst-case assumption: any excitation in one component direction (say purely axial) is completely transferred into any other degree of freedom (axial, lateral *and* vertical). This is clearly wrong from the point of view of the real physical case, but certainly allows

covering all possible cases at the same time in a safe manner. In the following analyses an acceleration of 1 g must be interpreted as the vectorial sum of an acceleration of 1 g in the axial direction, an acceleration of 1 g in the lateral direction and an acceleration of 2 g (to include the force due to gravity) in the vertical direction.

### Weakest component

In addition to the cavity, also the other components of the cold mass were examined to ensure that no other component suffer large forces which could potentially damage the module.

Calculations revealed that the conical flanges (“Bordscheibe”) and the LHe-tank could be considered as critical components as well. In particular the short rim where the conical flange (“Bordscheibe”) is welded to the LHe-tank is subject to large stresses. A vertical acceleration of 2g is causing a stress on the rim of 93 MPa (Fig 4.10) which is within the limit of the material.

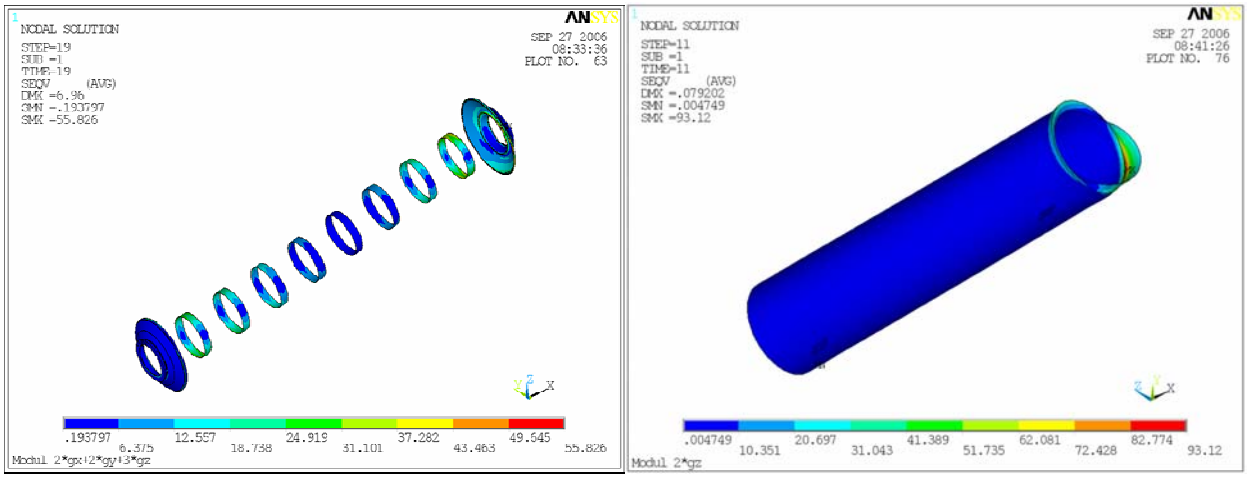


**Fig. 4.10: Analysis of mechanical stress in other components of the cavity system.**

Figure 4.11 shows the calculated values of all critical components for several accelerations. This plot reveals that the LHe tank is subject to higher stress with respect to the cavity, but since it is fabricated in titanium the values can be within the tolerable limits for this material depending on the specifications defined by DESY.

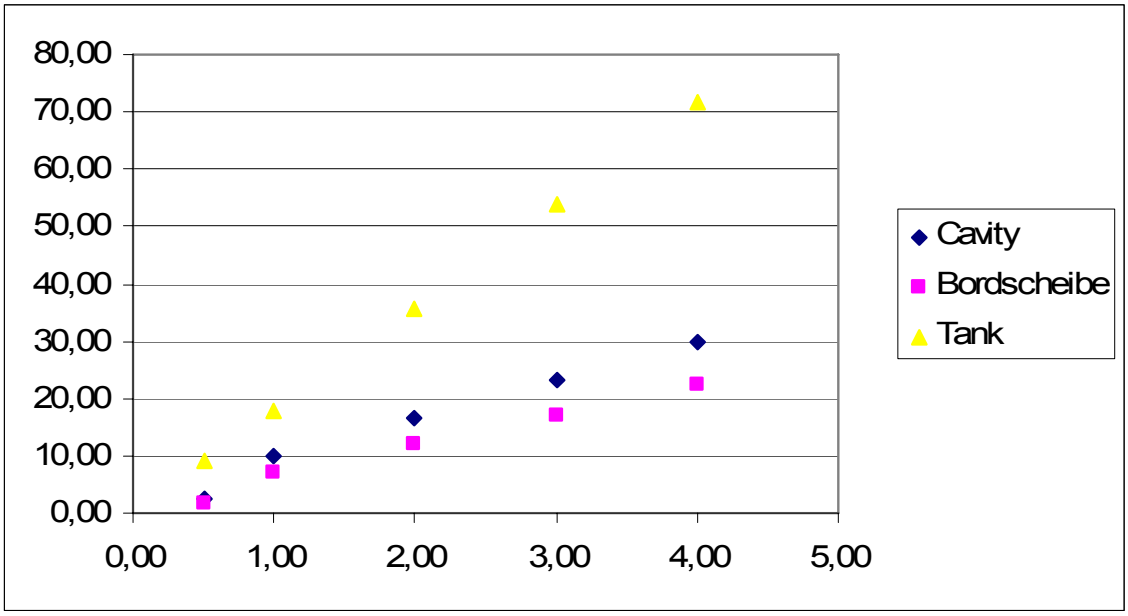


**Fig. 4.11: Maximum stress as a function of acceleration for the critical components of the dressed cavity system.**

## Conclusions

The performed simulations show that the cold mass can handle accelerations up to 10g if the tuner end of the cavity is laterally supported. We assume that the tuner design is such to provide the requested lateral support. If this is not the case, the bellow design shall be reviewed in view of the overall transportability of the cryomodule and not only in terms of longitudinal stiffness of the vessel during tuning.

# 5. The RF-Coupler Unit

Amongst other issues the design of the input RF-coupler has to allow for mechanical adjustment of the antenna after the actual assembly is completed. A set of bellows provides the mechanical flexibility to adapt each antenna-position individually from outside the module vessel. The same mechanical flexibility allows a comparable 'good' mechanical response of the antenna (i.e. large amplitudes of motion) to shaking and shocks. Such deflections under inertial forces were considered as dangerous since they could bring the antenna in contact with any other part of the assembly (such as the cavity itself). Hereby no focus is put on the strength of the contact and the consequences of it since even a soft touch (if detected) would demand an inspection of the affected components including the complete disassembling of the module.

The issue of having the antenna tip crashing over the cavity edge during transportation is not negligible. The probability of such event is increased by the fact that the antenna must be positioned at the centre of the cavity when cold. Given the support positions of both cavities and couplers, to reach the final positioning goal, in warm stage, alas during transportation, the coupler tip must be closer to the cavity walls thus increasing the possibility of contact for large excitations or for frequencies close to resonance.

Due to the fact that the cavities are constrained at the centre post, the largest relative motion between cavity and antenna tip during cool-down happens for the outermost cavities. During the simulations and analysis, the direction with minimum clearance has to be
considered.

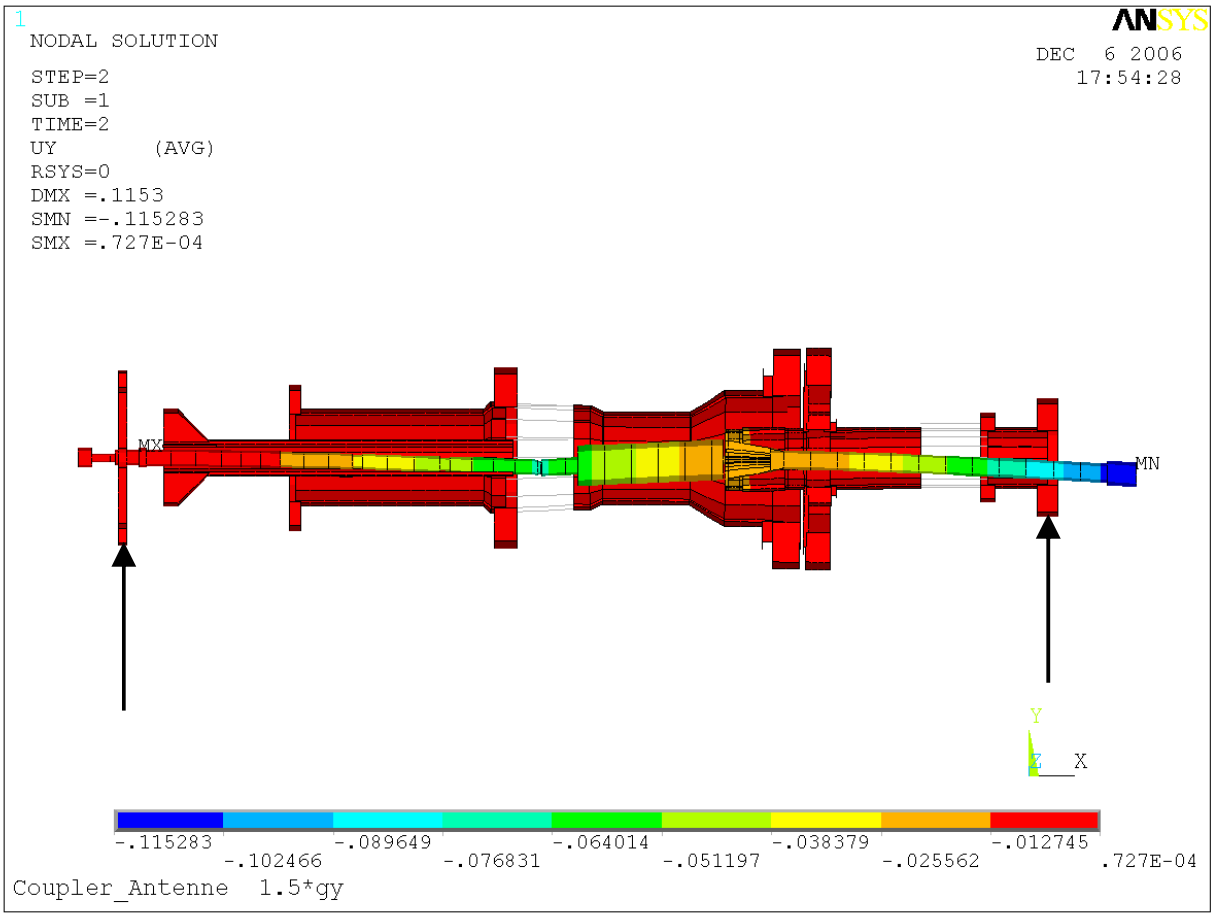


**Fig. 5.1: Deflection of coupler antenna under vertical excitation of 1.5 g.**

**The solicitation enters the system at the two outer flanges as indicated by the black arrows. The deflection is drawn in an exaggerated manner and colour-coded. The antenna tip is only deflected by 0.12 mm.**

To get quantitative results on the antenna movements during transport an FE-Model of the RF-Coupler unit was created. Like in the case of the cavity-system there are bellows: sub-components which are very difficult to be reliably represented. In the model they are replaced by eight strings of equal spring constant distributed equally on the nominal circumference of the bellow. The spring constant of these strings is adjusted such to fit

the bellow's properties given by the manufacturer. Unlike the cavity unit, the bellows here are much softer in comparison to the adjacent components, such as tubes made out of steel or $Al_2O_3$.

Figure 5.1 shows the deflection of the different parts, such as the antenna tip for an acceleration of 1.5 g in vertical direction. As usual in such representation, the amplitudes are exaggerated to show the deformed shape. The deflection of the antenna tip is only 0.12 mm (for 1.5 g). This value is much smaller than expected and the deflection is downward (unlike expected by the authors). It was believed that the antenna follows the upward pitching movement of the central part of the assembly (between the bellows). The flange connection in the middle, which is mechanically only loosely connected to the thermal shield, is represented free to move in the simulations. The coupler assembly is obviously well-balanced and the flanges are massive enough not to follow external shocks. Hence the basis of the antenna is not subject to large movements and the deflection of the tip of the antenna is primarily a result of its own inertial mass.

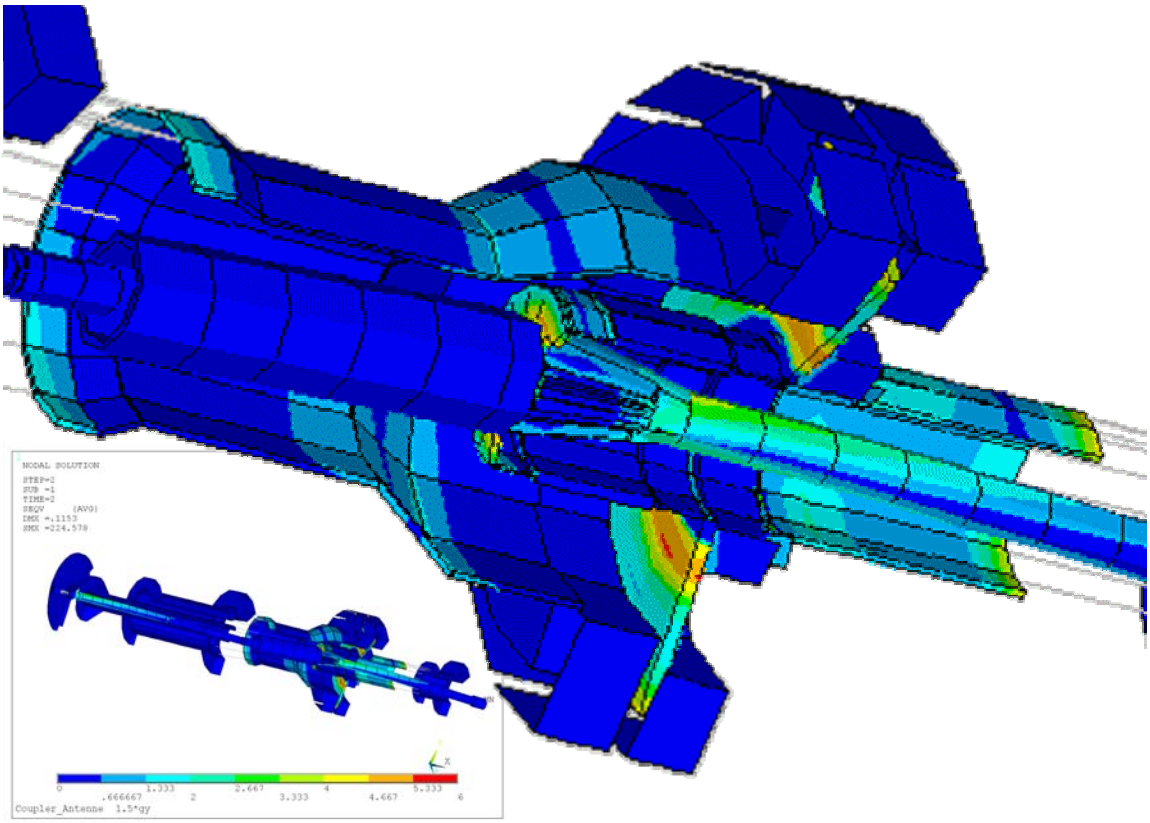


**Fig. 5.2: Colour-coded visualization of the material stress in the coupler unit.**

**The zoom focuses on the ceramic tube. The zones of largest stress are close to the steel-ceramic-transition.**

The fact that the floating flange stays in place with its positive implications on the little antenna displacement, bears a risk for the ceramic tube next to it. In Fig. 5.2 the material stress within the coupler part is displayed colour-coded for an excitation of 1.5 g. The areas of largest stress are within the radial plates which link the respective coaxial tubes and convey therefore the torque of the kinking antenna parts. These elements are made out of stainless steel. Hence, the stress of up to 6 MPa (for an acceleration of 1.5 g) is not harmful at all. But the stress extends partly into the regions were the steel-to-ceramic transition is located. This might be critical since such a link is of unpredictable, but rather little strength. Furthermore it has to be anticipated that frequent loading and stressing can harm the steel-ceramic-joint such that it becomes leaky without actually breaking. Such a behaviour is again unpredictable and dependant on too many parameters. To determine the maximum tolerable accelerations for the coupler-system, a breaking and test-series with representative ceramic-tubes has to be conducted. In addition care has to be taken that the tubes which will finally be used for the cryomodules are of the same and constant quality.

These results show that the most delicate component of the module is the coupler. It's recommended that, if no other precaution is taken, the transportation of cryomodules should be performed controlling the acceleration within values below 1.5g. Such conditions are safe for the other considered and analyzed components, too.

# 6. Suggested Tools

In order to optimize the transportation process and to minimize the motion of the cold mass, in particular of the cavity string, we propose to use a set of transport caps and a set of special clamping elements during the delivery of the cryomodules. A brief description of such devices is presented in the next two paragraphs.

## 6.1. Transport Caps

The supports that suspend the cold mass within the vacuum vessel are properly designed to minimize heat leak during operation and guarantee the alignment after cool down of the unit. These criteria are by nature in strong conflict with the need of strong support during handling and transportation. For this reason we propose the use of transport caps that can help the module handling by rigidly connecting the GRT ends to the vacuum vessel. Such solution, sketched in Figure 6.1, would solve the most critical and risky aspects of module transportation while providing a full isolation of the vessel content to the external world (see chapter 3). This solution allows to strongly reducing all the inertial forces acting on the reinforced fiber glass supports by creating a rigid link which would

directly transmit all the stresses and solicitations from the outer vacuum vessel to the GRT. In addition, rigidly fixing the GRT to the outer vessel would reduce the risk of bolt lift off at the support post which is not an improbable case during handling especially in shipping yard involving crane operations. The caps can be used to provide additional rigidity to the string assembly as well. In fact, for ground transportation, during which, due to the geometrical dimensions, the modules will be stored in trucks by keeping the beam direction (longitudinal axis) parallel to the transportation direction, the magnet at the end of the string will generate strong stresses to the rest of the string mainly connected by the invar rod. The additional connection of the string to the end caps would allow reducing this stress and the risk of completely compromising the alignment. The use of transport caps will also reduce the risk of lateral movements of the cold mass (pendulum effect) by allowing only a rotational degree of freedom around the GRT axis.

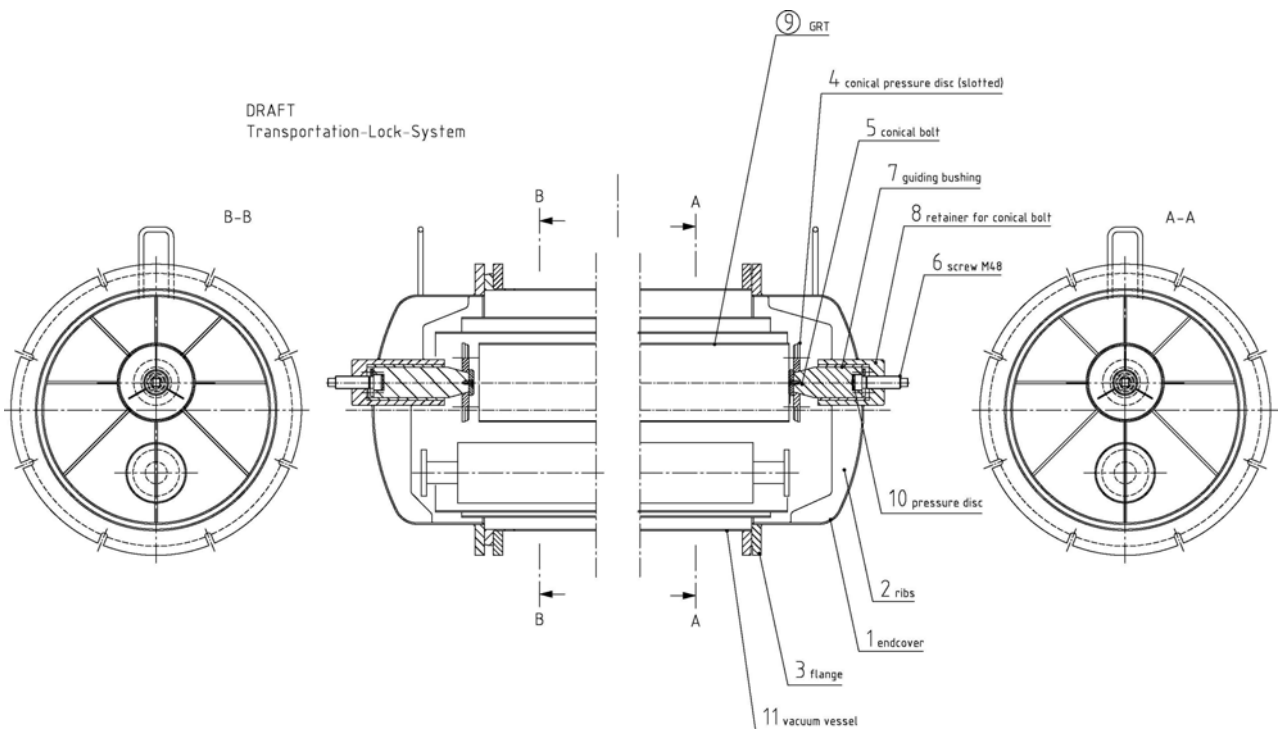


**Fig. 6.1: Schematic overview of the transportation caps.**

At the (sliding) seats of the posts, additional transport caps of rugged layout could be foreseen as a simple additional element. These caps would replace, during transport, the vacuum caps and block potential sliding of the posts, a function normally performed by

the horizontal adjustment screws. Furthermore these would lock completely the rotation around the axis of the GRT.

## 6.2. Clamping Elements

As discussed in section 3.3, the He vessel pins are connected to the invar rod by means of a bolted fixture. Such fixture is sufficient to guarantee alignment stability during cool down but not to reliably guarantee positioning and stress transmission during transportation. For this reason we propose to use tensioning elements as shown in Figure 6.2 to strengthen the resistance against axial motion of the cavities during transportation. By enhancing the torque on the large screws (M8) the pressure of the 'Ringfeder Spannelemnte' onto the central wedged ring increases in a continuous and uniform manner. The clamping system is removable and dues not deform or mark the parts on which it is mounted.

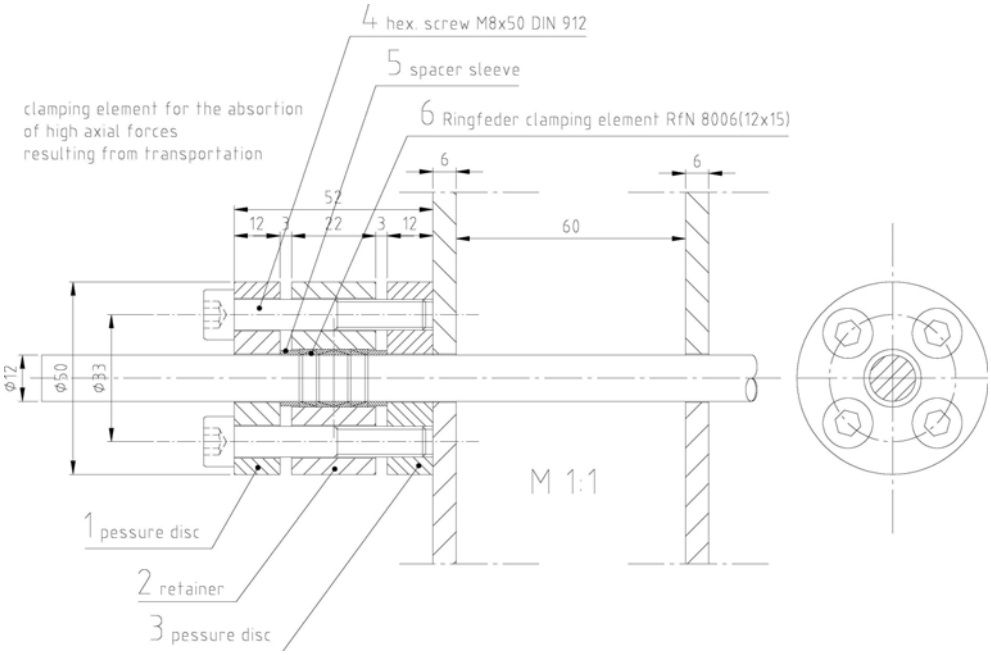


**Fig. 6.2: Sketch of the suggested clamping system to secure the string from axial motion.**

# 7. Summary

This special part of the study focused on the issue of cryomodule transportation. A detailed analysis highlighted the following main points and recommendations:

- The modules are not designed for transportation, for this reason it is recommended to use transport caps that allow creating a rigid connection between the outer vessel and the cold mass thus reducing lateral and longitudinal motion and vibration.
- The central post is the one carrying the longitudinal loads generated by acceleration or deceleration of the cold mass. The presence of the superconducting magnet at the end of the string may lead to bucking which can be avoided by modifying the clamping arrangement of the cavities (and of the magnet).
- The support posts suspension system can become a critical component if there is a bolt lift-off due to different acceleration of the cold mass with respect to the outer vessel. This can be overcome by using transport caps at the seats of the posts together with the transport lids, which fasten the GRT.



Created and released for publication by Babcock Noell GmbH. DRAFT Version

- It is of vital importance to stabilize the tuner end of each cavity against lateral deflection. The tuner unit itself has to accomplish such a function. Its design should incorporate this feature and should be reviewed accordingly.
- The zone of largest stress within the cavity-system lies at the edges of the LHe-tank, but since it is made out of Titanium it can easily resist loads generated by accelerations of up to 5 g. Provided a firm configuration of the tuner end, all other components of the dressed cavity-system are safe against permanent deformation. This analysis is based on the assumption that no plastic deformation of the Nb-cavity occurs for mechanical stress below 50 MPa.
- The coupler is the weakest subsystem of the cryomodule. Whereas the oscillations of the antenna are of less importance than the stress in the material close to the ceramic-steel-joint of the $Al_2O_3$-tubes. It is advised to make sure during all phases of transportation that no larger accelerations than 1.5 g occur.

If the proposed changes and suggestions are adopted and if the cryomodule is not exposed to accelerations considerably higher than 1.5 g, we are confident that a safe transportation method can be implemented.