TECHNICAL PROCEDURE

TRAILER AIR SUSPENSION SYSTEMS

SUBJECT: Concepts and Functions

LIT NO: T15001
DATE: September 2013

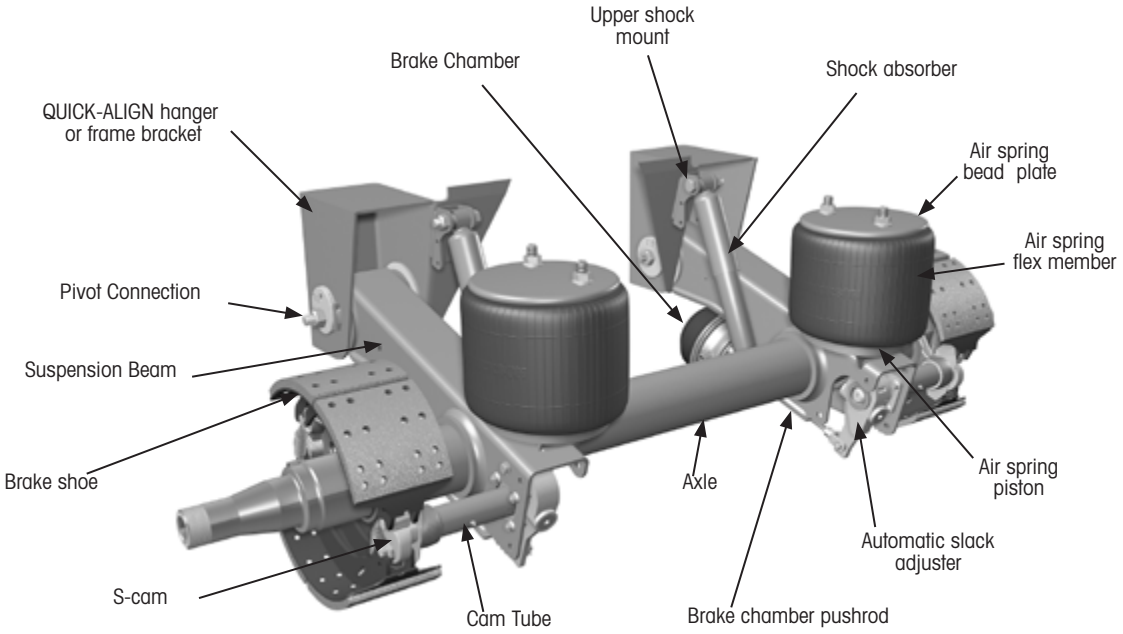

Figure 1: *Basic Air suspension components*

TABLE OF CONTENTS

Introduction 2
Hendrickson Trailer Suspension Types 2
Hendrickson Suspension Features 3
Ride Height 5
Lift Axles 8
Air Control System 9
Brakes 13
Trailer Alignment 13
Appendix A: Glossary of Terms 14

HENDRICKSON
The World Rides On Us®

INTRODUCTION

Hendrickson Trailer suspensions:

- Are designed to provide low-maintenance while operating for a long and safe life. The suspensions exhibit excellent ride characteristics under all legal load conditions. Your suspension was chosen to give your trailer the best ride, the correct load-carrying capability and the required amount of roll control for your vehicle.
- Are manufactured in modern, quality-oriented facilities. Great care is taken to ensure our customers receive the best product value for their purchasing dollar.
- Deliver durability with a light-weight, simple and trouble-free design. The suspensions will cushion the trailer, cargo and the driver with a quality ride not attainable without a Hendrickson air suspension system.

RELATIVE LITERATURE

This document includes a detailed description of concepts and functions of Hendrickson trailer suspension systems. For a complete listing of Hendrickson products and product literature, contact your Hendrickson representative or go online at:

www.hendrickson-intl.com

Available Hendrickson documentation can be viewed or downloaded from this site.

All Hendrickson online documentation are PDF files that require Adobe Acrobat Reader to open. This is a free application downloadable from Adobe's home page (http://get.adobe.com/reader/).

Other relative literature may include:

NAME	DESCRIPTION
L578	*Inspection and Lubrication*
L707	*Application Guide*
L761	*Understanding Air*
L843	*Air vs. Spring*

Relative literature is also included with various topics presented in this document.

CONTACTING HENDRICKSON

Contact Hendrickson Trailer Technical Services for technical assistance as needed. Contact options include.

EMAIL

For Hendrickson Trailer Technical Services, use the following e-mail address:

htts@hendrickson-intl.com

PHONE

Contact Hendrickson in the United States and Canada at 866-RIDEAIR (743-3247). From the voice menu, for technical information, select Technical Services/ Warranty.

HENDRICKSON TRAILER SUSPENSION TYPES

Hendrickson, and most other, trailer suspensions fall under two basic categories: spring or air . To compare the two, refer to L843 *Air vs. Spring Trailer Suspension Systems*. Hendrickson trailer suspension offerings can be found online at

www.hendrickson-intl.com

HENDRICKSON SUSPENSION FEATURES

Hendrickson supplies a wide variety of trailer suspension designs to meet your application needs. Each suspension is intended for use in specific applications with maximum load capacities. Each can include a wide variety of standard and custom features, many of which are discussed below.

TRI-FUNCTIONAL® BUSHINGS

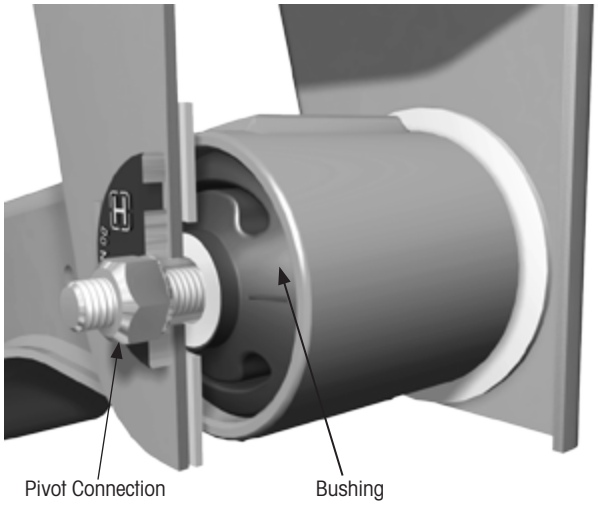

Figure 2: TRI-FUNCTIONAL® *Bushing*

The TRI-FUNCTIONAL® Bushing (Figure 2):

- Controls vehicle roll- and axle-alignment, yet allows easy up-and-down axle travel.
- Dampens forces generated by braking, accelerating and irregular road surfaces.
- Cavities or voids in the rubber located at the top and bottom of the bushing absorb vertical movement. These cavities help to increase roll stability by collapsing during operation to absorb forces as the vehicle turns.
- The bushing's center portion (solid rubber molded around a steel center sleeve) absorbs horizontal and lateral movement with little fore-aft deflection.

The bushing and suspension pivot connection are virtually maintenance free. Bushing movement is normal and should be expected during inspection and testing.

Bushing spacers, however, should be checked for wear. Cupping of spacers over the bushing tube is normal and spacers should be replaced before the rub area is worn through.

Hendrickson's TRI-FUNCTIONAL Bushings provide a resilient connection that allows an axle to walk without excessive flexing. The TRI-FUNCTIONAL Bushing, in conjunction with the rigid axle connection, results in a roll-stable suspension design that resists trailer lean independent of air spring loading.

There are times when a problem seemingly in the area of the suspension is diagnosed as a failed bushing. Closer inspection typically reveals another component or a faulty installation as the problem.

For more information, refer to:

NAME	DESCRIPTION
B106	*Pivot Bushing Inspection Procedure*
L427	*Bushing Replacement Procedure*
L750	*Bushing Tube Spacer Inspection/Replacement Procedure*
L1071	*Pivot Bushing Inspection/Replacement Information*
T12002	*Troubleshooting*

For further information, refer to CONTACTING HENDRICKSON on page 2.

RIGID-AXLE CONNECTION

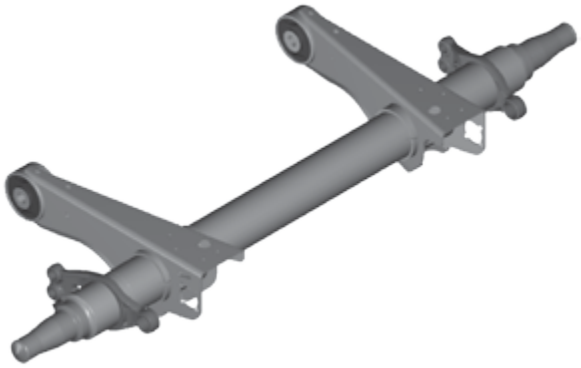

Figure 3: *INTRAAX® integrated axle/beam weldment*

INTRAAX® and VANTRAAX® axle/beam assemblies (sample weldment shown in Figure 3) are welded by robots, along with some HT axles.

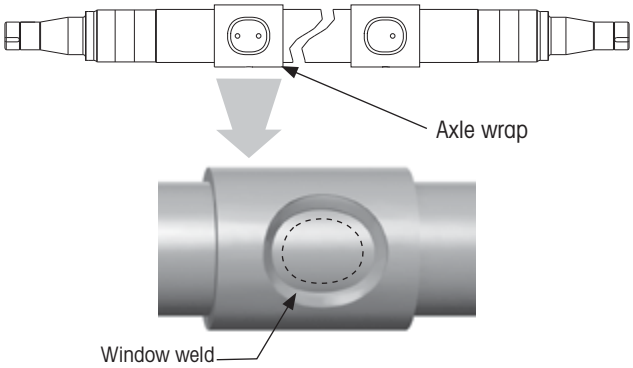

Figure 4: *Patented Axle Wrap and window weld*

The INTRAAX® and VANTRAAX® series axle connection is integrated into the suspension beams with a patented axle wrap and window weld (Figure 4) for optimal structural integrity. The suspension beam mounting surface is machined and continuously welded to the axle wrap, eliminating axle seats and U-bolts. This rigid-axle connection:

- Provides outstanding roll stability.
- Maintains axle alignment to the beam.
- Contributes to a straighter axle tube and controlled toe alignment.

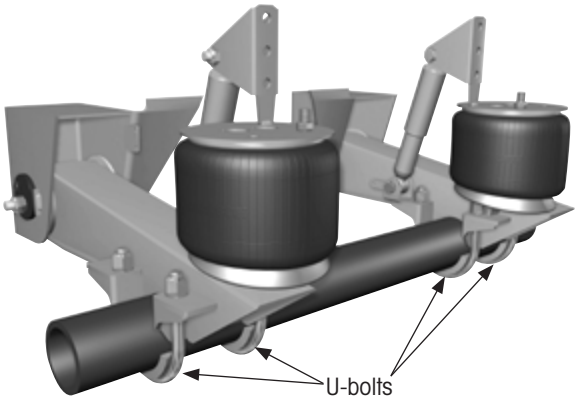

Figure 5: *Typical HT suspension system (Axle welded to suspension beam axle seats.)*

In addition to being welded, the HT series axle connection (Figure 5) is also bolted in place.

ROLL STABILITY

The TRI-FUNCTIONAL Bushing and rigid-axle connection result in a roll-stable installation. With only one HCV per trailer, the trailer floor remains level, even when the trailer is offset loaded.

SOFT RIDING

The air springs and TRI-FUNCTIONAL bushings support the trailer load while simultaneously absorbing road shocks. This produces a softer, smoother ride that protects the driver, cargo and vehicle. It also provides longer vehicle life and greater driver comfort.

LOAD CONTROL

When properly installed, the single Height Control Valve (HCV) helps to maintain an evenly distributed load across all axles. With the exception of tire deflection, the trailer's ride height remains constant whether loaded or unloaded.

DURABILITY

Hendrickson air suspensions and their components have been thoroughly tested to provide a long, virtually maintenance free life. Their sturdy construction has a history of proven durability.

RIDE HEIGHT

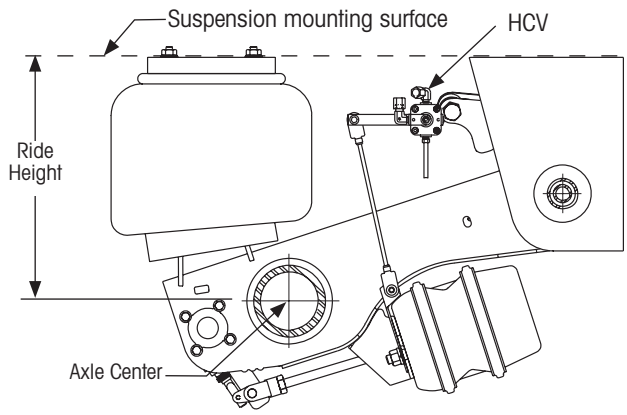

Figure 6: *Ride Height*

Ride height (Figure 6) is measured from the suspension mounting surface to the center of the axle. All Hendrickson air suspensions are designed to operate at a specific ride height. Care must be taken to ensure the correct loaded suspension ride height is maintained while the trailer is in use. To determine your Hendrickson suspension ride height, locate the suspension identification tag, Table 1 or refer to L977 *Trailer Suspension System Identification Guide*.

SUSPENSION SYSTEM	TAG LOCATION
T Primary Suspensions	Front of roadside frame bracket.
HT Primary Suspensions	Front of roadside frame bracket or inside of curbside beam.
INTRAAX® Primary Suspensions	Inside of curbside beam.
HS Slider with HT Suspensions	Front cross member on HS box.
HIS Slider with INTRAAX Suspensions	Front cross member on HS box.
VANTRAAX® (K-2) Slider with HT Suspensions	On roadside slider box side rail above front frame bracket.
VANTRAAX (K-2) Slider with INTRAAX Suspensions	On roadside slider box side rail above front frame bracket. Also has blank INTRAAX tag on inside of curbside beam.

Table 1: *Suspension system tag locations*

Read the model number on the identification tag. The ride height, along with other product information, is included in the model number. Refer to Table 2 for model number examples and ride height identification (the bold number indicates ride height):

MODEL	DESCRIPTION
HT Models:	HT230-14-001
HS Models:	HS190T-**14**-4801A
INTRAAX models: (Pre 2002)	AA230TBA..1 **14**A1A01 ..
INTRAAX models: (Pre "smart" descriptions)	B**15**U71.5...
INTRAAX models: ("smart" descriptions, >2002)	AAT 25K **14**RH 77N
VANTRAAX	HKANT40K-9-18RHL77

Table 2: *Suspension system ride height identification*

For further assistance to determine the ride height, refer to CONTACTING HENDRICKSON on page 2.

Changes in ride height affect air spring height, which in turn changes the suspension's load carrying capabilities. To help maintain load equalization among the axles, Hendrickson trailer suspensions are intended to be used at ride heights which maintain equal air spring heights throughout the application.

NOTICE: Operating a suspension at an incorrect ride height can result in improper loading and shorten the service life of the suspension.

IMPORTANT: Hendrickson is not responsible for components which fail due to incorrect ride height settings.

More information on ride height, inspection and maintenance is available online: L388 *Ride Height Settings*, L459 *Checking Trailer Ride Height*.

FACTORS AFFECTING RIDE HEIGHT

The following features should be considered relative to ride height and air suspensions:

- The HCV controls the ride height on the suspension on which it is mounted. Additional axles equalize to match the axle with the HCV.
- The fifth wheel height, trailer frame flex and frame shape will control the ride height of the other suspensions.

The following sections describe the impact of these factors in more detail.

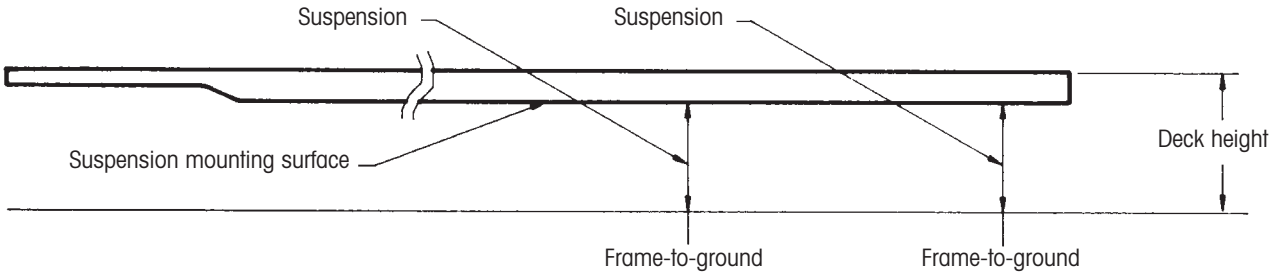

Figure 7: *Frame-to-ground height*

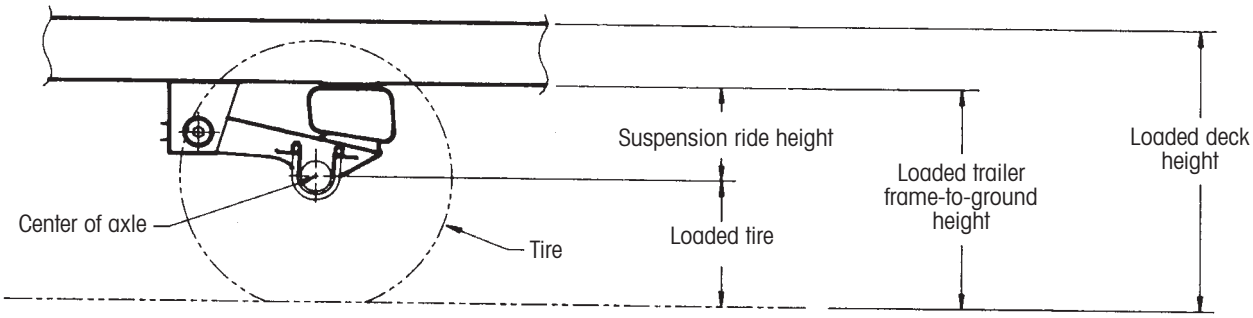

Figure 8: *Trailer deck height*

FRAME-TO-GROUND HEIGHT

This dimension (Figure 7) is the height from the bottom of the trailer frame (or suspension mounting surface) to the ground and must be determined at each suspension location. The suspension ride height (Figure 8) is then calculated by subtracting the LOADED tire radius from the LOADED frame-to-ground height. The radius of the tire will decrease as the trailer is loaded due to tire deflection, which in turn, affects the trailer deck height.

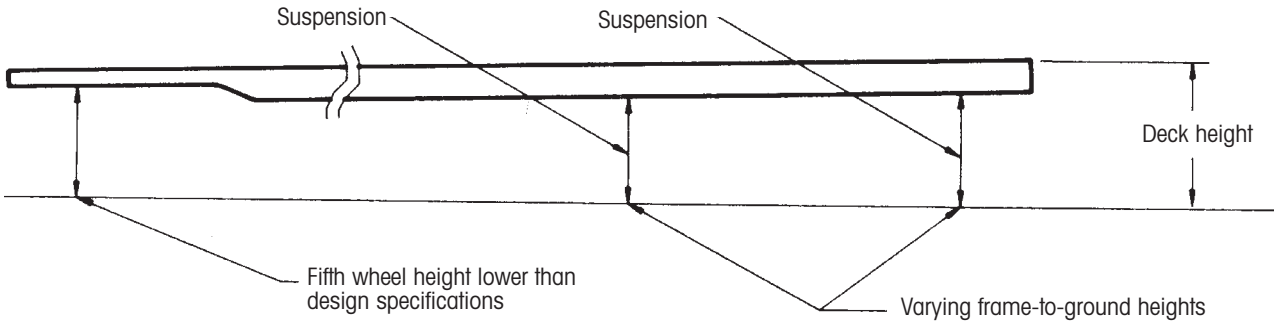

Figure 9: *Fifth wheel height*

FIFTH WHEEL HEIGHT

The tractor fifth wheel (Figure 9) affects the height of the trailer frame (for example: a low fifth wheel height would cause the trailer frame to slope downward). Variations in the fifth wheel height will result in variations in the frame-to-ground height, which will impact the suspension ride heights. The correct suspension ride height must be determined at each suspension location.

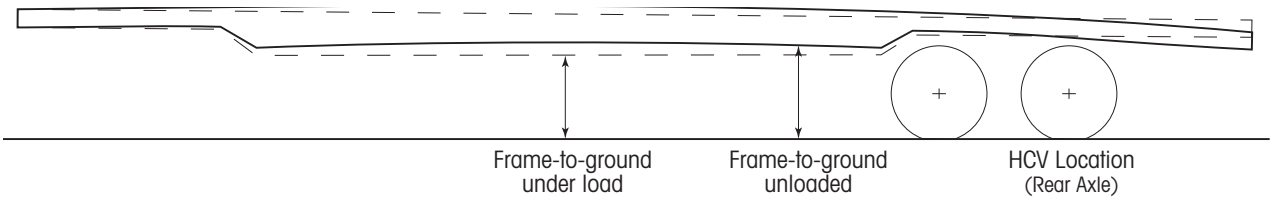

Figure 10: *Flatbed with arch*

TRAILER WITH ARCH

Many flatbed trailers are designed with an arch (Figure 10) which causes variations in frame-to-ground height when under load. In all load cases, suspension ride height must not exceed suspension specifications.

When ride height variations are required, refer to CONTACTING HENDRICKSON on page 2 to evaluate load equalization capabilities.

For more information, refer to:

LIT #	TITLE
L388	*Recommended Ride Height Settings*
L707	*Application Guide*

SUSPENSION TRAVEL

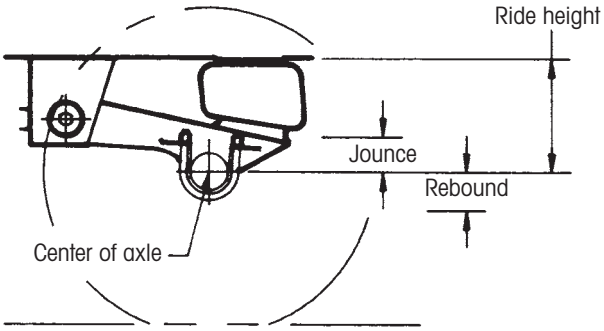

Figure 11: *Suspension travel*

Hendrickson Trailer Suspension Systems use these terms to define suspension travel:

JOUNCE: The maximum amount of upward axle travel, from ride height toward the frame, allowed by the suspension (Figure 11).

REBOUND: Maximum amount of downward axle travel, from ride height toward the ground, allowed by the suspension (Figure 11).

TIRE CLEARANCE

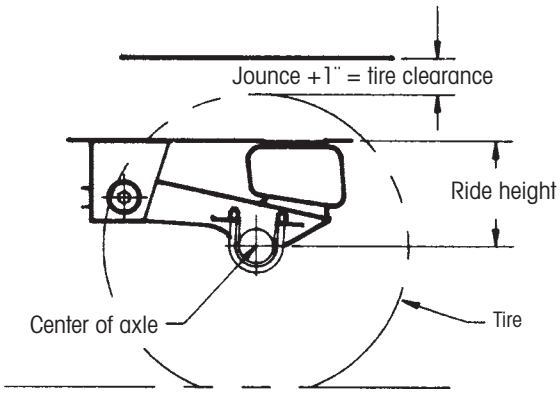

Figure 12: *Tire clearance*

When selecting a suspension, the trailer's tire clearance (Figure 12) must be used to determine the maximum suspension Jounce permitted by the trailer design. Hendrickson specifies the tire clearance above Jounce requirement must include one inch for all HT™ Series, INTRAAX® and VANTRAAX® models. T series models require two inches of tire clearance above the specified Jounce requirement.

A two inch clearance is also specified between the trailer frame and tire inboard sidewall. This will provide sufficient clearance to allow for tire distortion and Trailer Drop.

Tire clearance example:

3¨	Jounce
+1¨	Clearance (HT, INTRAAX and VANTRAAX models)
4¨	Clearance required above tire at ride height

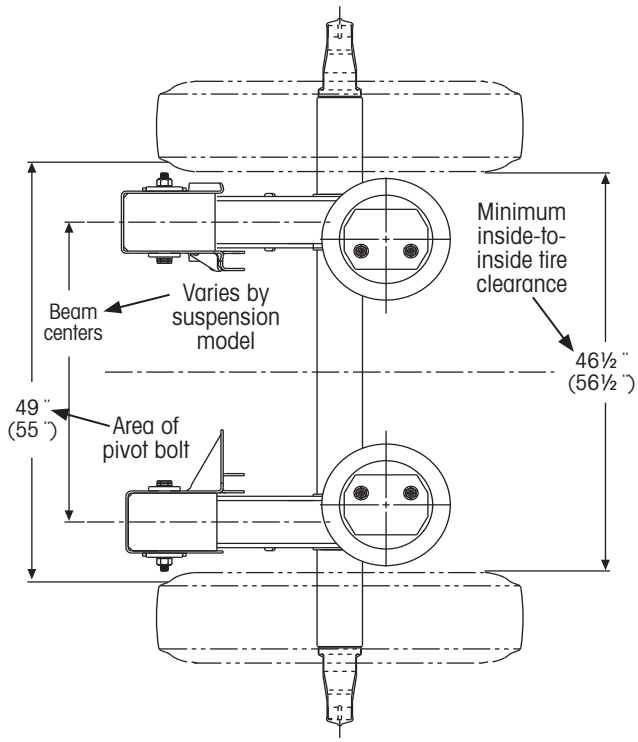

NOTE: The top dimensions are for 35 in. suspension beam centers (96 in. wide trailers). The bottom dimensions (in parentheses) are for 41 in. suspension beam centers (102 in. wide trailers).

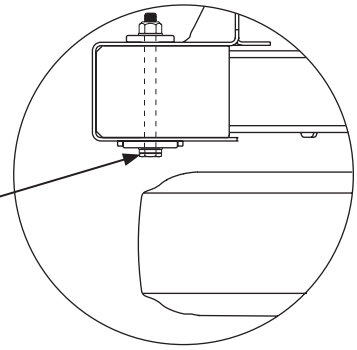

If the potential exists for tire interference, the QUICK-ALIGN shear-type bolt can be installed from the outboard side of the frame bracket. Refer to L579 *Alignment Procedures* for details.

Table 3: *Inside-to-inside tire measurements*

LIFT AXLES

The use of multiple axles can result in difficult maneuverability, excessive tire wear and frame deflection for some trailers. Making select axles liftable avoids these issues any time additional load bearing axles are not in use.

FRAME-TO-GROUND HEIGHT

The height of the bottom of the trailer frame (or suspension mounting surface) from the ground (Figure 13) must be determined at each suspension location. This dimension must provide the desired LOADED deck height when lift axles are used (Refer to L707 *Application Guide* for details).

A leaf spring suspension's ride height will change under various loads. When mixing liftable air with leaf spring suspensions, the auxiliary air suspension's ride height must be specified to match the **LOADED** leaf spring suspension's ride height.

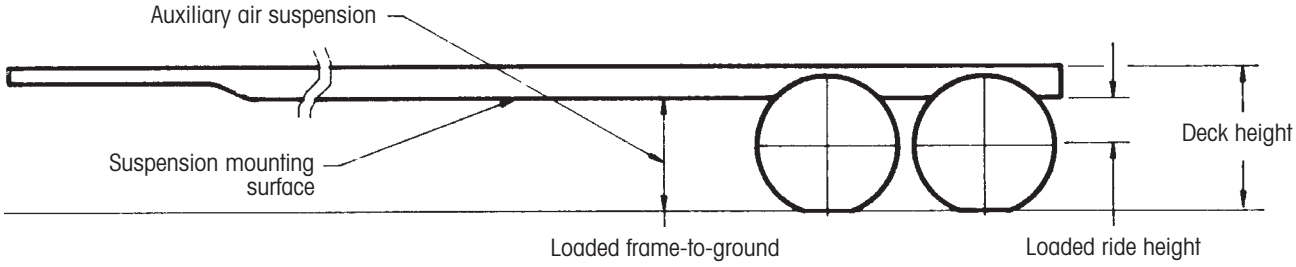

Figure 13: *Frame-to-ground height (lift axle)*

SUSPENSION LIFT KITS

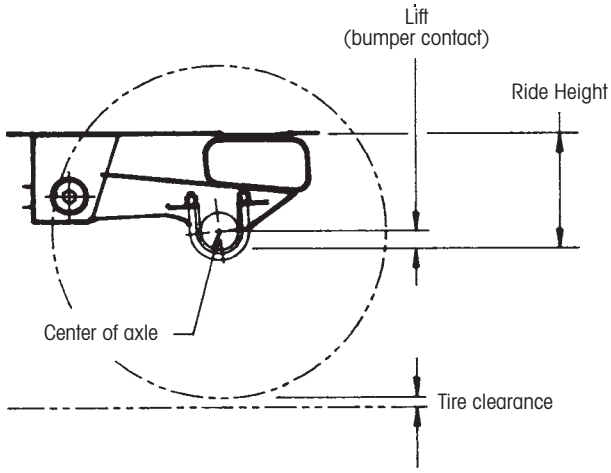

Figure 14: *Lift suspension*

Hendrickson suspension lift kits Include hardware that, when added, provide an axle lifting capability (Figure 14). A lift controller must be installed to raise and lower the lift axle. Refer to T91001 *UBL Hardware Kit Information and Requirements*.

Hendrickson's suspension Jounce dimension includes an allowance for air spring bumper compression. As a result, the amount of lifted up travel will be less than the Jounce. Use the suspension bumper contact dimension to determine the amount of axle lift.

The suspension bumper contact indicates the amount of axle lift. The resulting clearance under the tire will be less than the axle lift depending on both frame and tire deflection.

AIR CONTROL SYSTEM

Many types of air controls are available for Hendrickson trailer air suspensions. The most common system automatically regulates the designed ride height by controlling the air pressure supplied to the air springs. When used in conjunction with other types of suspensions, such as a leaf-spring suspension, an operator-controlled pressure regulator is often employed. If using axle lifts or other special features, other air control circuits and components are added. All systems are pneumatic and operate from the vehicle's compressed air supply. The air pressure in the air springs control the ride height and load on the axle.

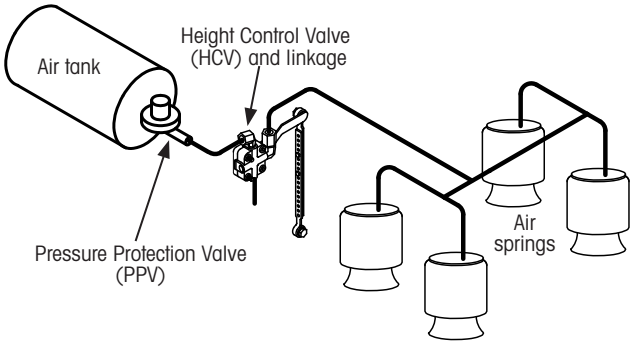

Figure 15: *Basic HCV plumbing diagram*

Figure 15 illustrates a typical air control arrangement used on Hendrickson trailer air suspensions. One HCV controls any number of air suspensions. Contact the trailer manufacturer (OEM) for specific information about your trailer air control system.

HEIGHT CONTROL VALVE (HCV)

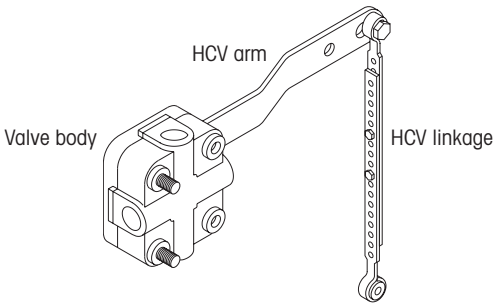

Figure 16: *Height Control Valve (HCV)*

The HCV (Figure 16) on the Hendrickson trailer air suspension automatically responds to the relative position of the axle and vehicle frame. It meters air into or out of the air springs. Variations in load result in the adding or exhausting of air in order to maintain constant ride height.

Since the Hendrickson trailer air suspension is a mechanically stable suspension, only one HCV is necessary. This system is less complex, less expensive and less troublesome. In addition, should an air spring malfunction occur, it provides a safer system. A leak in the system will allow the trailer to remain stable.

Notice that only one HCV is used per semi-trailer. A single HCV can control two, three, four or more axles.

PLACEMENT

For close-spaced axle arrangements, the height control valve can be placed on any of of the suspensions without impacting the operation of the system. for wide spread axle arrangements or on semi-trailers that deflect under load, Hendrickson recommends the HCV be placed on the rearmost axle. The HCV should not be installed on a liftable suspension.

EXCEPTIONS

The requirement for one HCV assumes one end of the semi-trailer is attached to a vehicle that is maintaining the height of that end of the trailer. For full trailers or multiple axle dollies that are not rigidly attached to another vehicle, a HCV is required on the front and rear suspension in order to control the height of the entire structure.

IMPORTANT: The use of two HCVs is not an approved practice. Continued use will void the warranty, unless approved in writing by the Hendrickson Trailer Suspension Systems Engineering Department.

NOTE: For installation instructions, refer to materials provided with the air control kit.

HOW IT WORKS

A difference in distance between the axle and frame body causes the actuating arm to vertically move (Figure 17).

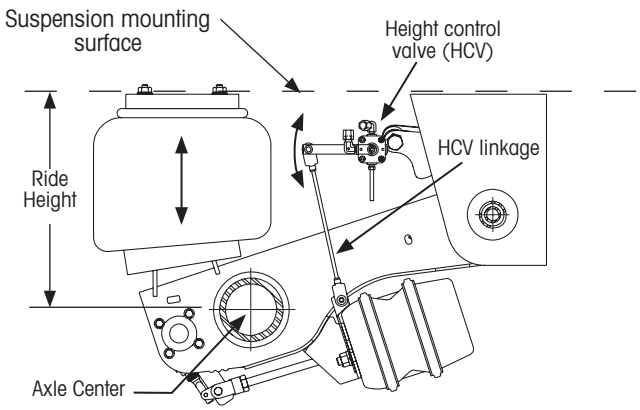

Figure 17: *Height Control Valve (HCV)*

The height control valve (Figure 16 and Figure 17) is an integral part of a pneumatic control system. This system, with the Hendrickson HCV, maintains a constant static design height and does not respond to short duration dynamic changes in axle position.

An increase in trailer load will cause the trailer to drop in height, compress the air springs and decrease the distance between the axle and trailer frame. This causes the HCV arm to rotate upward and open the HCV valve to add pressure to the air springs (Figure 17). The valve remains open until the arm is horizontal and the trailer is returned to its designed ride height. At this point, the valve is closed.

As trailer load decreases, current pressure in the air springs act to lift the trailer. As the trailer lifts, the linkage pulls the HCV arm downward and the valve opens to exhaust pressure from the air springs. The valve remains open until the arm is horizontal and the trailer is returned to ride height.

TRAILER DROP/TRAILER WALK

During the loading and unloading of cargo, two trailer reactions can occur: trailer drop and trailer walk. Trailers equipped with air suspensions can experience both phenomena.

TRAILER DROP

With an air suspension, trailer drop occurs due to the inherently low spring rate that gives the suspension smooth ride. When a significant load is quickly added, such as a loaded lift truck entering the trailer, the trailer deck will drop, sometimes as far as the air springs' internal bumpers will allow. This lowered deck position is generally temporary; the suspension's height control valve will open under these conditions sending additional air into the air springs to return the trailer to its original ride height. However, there is an inherent

time delay involved in this action and assistance from the tractor's air compressor may also be required.

TRAILER WALK

Trailer walk, also known as dock walk, is the repetitive forward movement of the trailer causing it to move away from the loading dock. This movement is a consequence of the downward trailer movement, combined with the resulting rotation of the suspension's trailing arms, and the corresponding rotation of the tires when the trailer's parking brakes are applied.

Similarly, a loaded trailer sitting for an extended period of time can lose air spring pressure, allowing the trailer deck to gradually drop. Again, resulting in forward movement that could damage or collapse the trailer's landing gear.

For example:
If the trailer deck drops three inches, approximately the full jounce travel of the air suspension, the trailing arms will rotate about 9 degrees around the pivot joint. If the parking brakes are engaged when this occurs, the tires will also rotate the same 9 degrees, thus rolling the trailer forward by about three inches, assuming the 20.25 inch loaded rolling radius of an 11 R24.5 tire. Refer to L816 *Dock Solutions* for more.

All Hendrickson trailer air suspensions rely on a rubber bumper contained within the air spring to limit the suspension up travel (or jounce). When air exhausts from air springs, the air spring bumpers support the trailer and its load. The bumpers are designed to support a load equal to the suspension's rated capacity. They provide stable support of the trailer during loading or unloading of cargo and while idle.

For more information, refer to:

NAME	DESCRIPTION
B109	*Loading Dock Approach Procedure For Trailers Equipped with an Automatic Air Suspension Dump Valve*
L816	*Trailer Loading Dock Terms And Solutions*

ROLL STABILITY

This references a trailer's natural tendency to rollover when turning. Hendrickson's patented design that uses TRI-FUNCTIONAL® Bushings in conjunction with a rigid axle connection, offer improved roll stability over spring design. The axle-beam weldment (INTRAAX® and VANTRAAX®) acts like a stabilizing bar which gives the air suspension greater roll stabilization and performance beyond that of spring suspension systems.

For more information, refer to L761 *Understanding Air Ride*, Roll Stability.

AIR DUMP VALVES

Air dump (or exhaust) valves increase stability during trailer loading and unloading. The valves can be controlled automatically, manually or by the use of an air-pilot valve.

When suspension air is exhausted, Hendrickson Trailer air suspensions limit the suspension up travel (Jounce) by a rubber bumper (Figure 18) located inside the air spring. The air-spring bumpers adequately support the rated suspension capacity while the trailer is idle with the suspension air exhausted. Hendrickson approves using air dump valves only when the control exhausts all the trailer air springs. Also, use of the air dump control is approved for the following situations:

- A parked trailer for any length of time, loaded or unloaded, either when connected to the tractor or supported by the landing gear legs.
- A trailer being loaded or unloaded, particularly when fork lift trucks are used.
- A dump trailer during the dump mode only.
- A trailer experiencing a sudden unloading of cargo, such as steel removed with a crane.

Any variation beyond these conditions must be approved in writing by Hendrickson Applications Engineering Department.

AIR SPRINGS

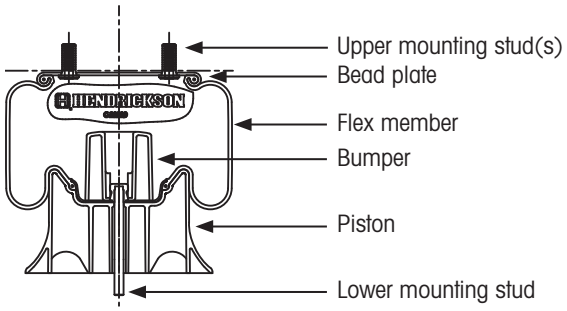

Figure 18: *Air spring components*

Air suspensions rely on a cushion of air to support trailer load. This cushion of air is created and maintained within the air springs (Figure 1 on page 1 and Figure 18).

NOTICE: Moving an air equipped trailer without air pressure in the air springs can cause damage to suspension components.

If you have questions, refer to CONTACTING HENDRICKSON on page 2.

SHOCK ABSORBER

Shock absorbers (Figure 1 on page 1) absorb energy to prevent suspension oscillation. Shock absorbers are also used as Rebound stops in most Hendrickson air suspensions. The shock absorber limits the downward stroke of the axle, which prevents the air spring from being pulled apart. In some severe service applications, a shock strap or chain down stops are added to additionally aid in limiting the stroke of an air spring.

All Hendrickson shocks are designed to support the weight of the suspension while a trailer is lifted. Use **only** Hendrickson shock absorbers for replacements.

⚠CAUTION: Do not lift the trailer without shock absorbers in place or alternate down stop. If shock absorbers or down stops are not in place, overextension of the air springs will occur and could damage the air springs.

IMPORTANT: Hendrickson trailer air suspensions designed using of specific air springs and shock absorbers. Replacement with other than genuine Hendrickson parts may cause premature failures and possibly void the warranty.

PIVOT CONNECTION

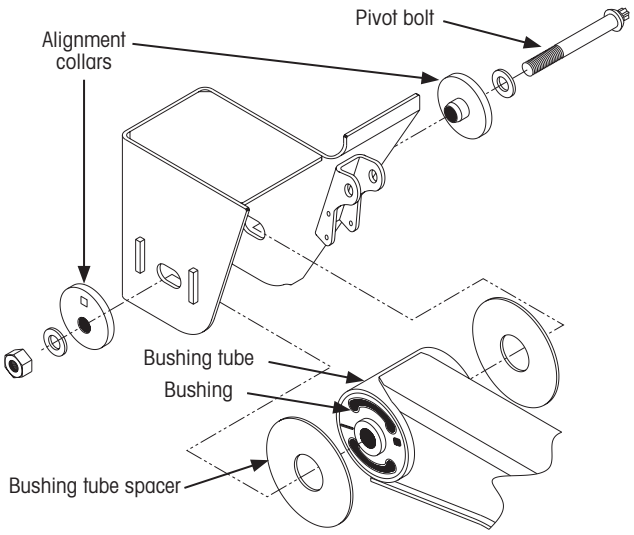

Figure 19: *Pivot connection (INTRAAX® QUIK-ALIGN® shown)*

A correctly assembled pivot connection (Figure 19) is crucial to the life of the suspension. The pivot fastener must continually provide a sufficient clamp load to prevent suspension failure.

⚠CAUTION: Failure to properly install pivot nut and bolt can result in a loose connection and damage to suspension components. Pivot bolt hardware cannot be reused.

Many suspension failures can be caused by improperly installed pivot connections. These included:

- Misalignment
- Elongated slot in frame brackets
- Bushing failure
- Premature wear to bushing tube spacers and bushing tube
- Bushing tube edge wear

IMPORTANT: Suspensions are generally shipped with loose pivot bolts. Alignment is completed by the OEM during trailer assembly.

Refer to the following pivot connection online service literature:

LIT #	TITLE
B106	*Pivot Bushing Inspection Procedure*
L578	*Suspension Inspection and Lubrication*
L579	*Alignment Procedures*
L750	*Bushing Tube Spacer Inspection / Replacement Procedure*
L783	*VANTRAAX® Pre-aligned Slider Decal*
L1071	*Pivot Bushing Inspection / Replacement Information*

BRAKES

More information about Hendrickson drum brakes can be found in L974 *Drum Brake Maintenance Procedures*.

Detailed information on Air Disc brakes can be found in literature provided by the brake manufacturer. Hendrickson's literature web page provides links to supplier disc brake manuals.

TRAILER ALIGNMENT

Proper alignment and general maintenance of all trailer components is required for smooth operation and longevity of trailer and suspension. Once aligned, unless physical damage has occurred, component alignment is affected only by normal wear of mechanical parts. Detailed information on trailer / suspension alignment can be found in L579 *Alignment Procedures*.

APPENDIX A: GLOSSARY OF TERMS

The terms list below are common to truck and trailer suspension systems.

LIST OF TERMS

ABS
ADB
Anchor Pin
ARL
Axle Track
BCCC Dimension
Brake Block
Brake Chamber
Brake Drum
Burnish
Caliper
Cam Under Head Length
Clevis Pin
CMVSS-121
DAP
Disc Brakes
Dock Walk
Drum Brake
DST®
Dust Shield
Duty Cycle
Duty Cycle "Class Definitions"
FC
FC XLII
Jounce
Liftable Axle
Rebound
Return Springs
Static Load Radius (SLR)
Tire Inflation Systems (TIS)
Tire Rolling Radius
TOFC
Torque Balance
Track
Trailer Drop
Trailer Walk

ABS
Antilock Brake System - electronically monitors wheel speed and prevents wheel lock-up by rapidly cycling the brakes during panic stops and when stopping on low-friction surfaces.

ADB
Air Disc Brakes

Anchor Pin
A pin or pins used to retain brake shoes with in the brake assembly.

ARL
Auxiliary Rebound Limiter - sometimes referred to as "down stop", is a strap or chain in addition to the shock absorber used to limit suspension beam travel during rebound or when the trailer is lifted for TOFC or other purposes.

Axle Track
The nominal distance between the center line of the curbside and raodside tires on a dual axle suspension. This distance can vary depending on wheel-end components specified.

BCCC Dimension
Distance from the center of the brake shoe to the center line of the brake chamber.

Brake Block
Friction material or lining attached to a brake shoe. Disc brakes use pads with friction material.

Brake Chamber
Device inside which a diaphragm converts air pressure to mechanical force, via a push rod, for brake actuation. Consists of service chamber or service chamber/spring chamber. For example, a 30/36 chamber consists of a Type 30 service chamber and a Type 36 spring chamber.

Brake Drum
Attached to the hub. Absorbs kinetic energy from the shoe and lining assembly and transfers heat away from the brake surface to dissipate the heat into the atmosphere over time. The majority of drums are entirely of cast iron. Generally these are divided into three service-rating codes based on application. There is standard duty, heavy duty, and extra heavy duty. In addition, there are inboard mounted drums (with spoke wheels) and outboard mounted drums (with hubs). The other brake drum is the steel jacketed type. This consists of a steel mounting face with a cast iron braking surface insert.

Burnish
The conditioning or "seasoning" of a brake lining by wear and temperature via a test procedure or in-service operation.

Caliper
In an air disc brake system, the clamping device containing friction material mounted to pads. When actuated, the caliper applies braking force to both sides of the rotor.

Cam Under Head Length
On DAP trailer axles, the length as measured from under the brake cam head to the end of the cam.

Clevis Pin
Pin connecting the arm of a slack adjuster to a brake chamber push rod yoke.

CMVSS-121
Canadian Motor Vehicle Safety Standard-121 for air braked vehicles. Copies of the requirements can be obtained from Canadian Transportation Equipment Association, 16 Barrie Blvd., Unit 3B, St. Thomas, Ontario. N5P 4B9 Tel: 519-631-0414, Fax: 519-6311333, E-mail:transportation@ctea.on.ca, WebSite: http://www.ctea.on.ca

DAP
Double Anchor Pin

Disc Brakes
A foundation brake system consisting of a flat disc or rotor on either side of which are friction pads. Equal and opposite forces are applied to these pads to press their working surfaces into contact with the braking path of the rotor.

Dock Walk
Or Trailer DropWalk, the tendency for a trailer to inch forward as the load changes while parked at the dock. Refer to TRAILER DROP/TRAILER WALK on page 10.

Drum Brake
A brake system in which two brake shoes with friction material expand into a rotating drum.

DST®
Dock Stabilizing Technology™ – an integrated system to resolve loading dock trailer walk and drop issues. Refer to L781.

Dust Shield
Plate that's mounted behind a brake drum to minimize entry of dirt and road splash.

Duty Cycle
Measurement of the amount of time a component is fully utilized, expressed as a percentage of the complete usage of the component. In this application, "Duty Cycle" refers to the average amount of time (ratio) a vehicle is loaded vs. not loaded.

Class Definition"
"Class Definitions" define the type of vehicle.

On-Highway
(Van or Refrigerated trailer moving different types of freight, include City delivery)

- Operation on road surfaces of good to excellent concrete or asphalt.
- LineHaul - Generally distances are more than 30 miles between starting and stopping.
- City Delivery - Pick up and delivery service within cities and/or suburban areas. Three (3) miles between starts/stops (typical).
- 100% load going /40% or more load return (typical).

Vocational

- Movement of:
  - Petroleum or liquid product, gases, to processing, delievery, or fueling sites.
  - Rock, ore, gravel, and minerals between mine sites and delivery sites.
  - Heavy equipment or materials at legal maximums or special permit loadings.
- Vehicles:
  - Used for residential refuse / recycle pickup.
  - Operated in commercial / industrial pickup.
  - Used in transfer / relocation on a maximum grade of 8%, typically greater than 10 miles per trip.
- 90% of operation time on road surfaces of concrete, or asphalt, and up to (less than) 10% of operation time on maintained gravel, crushed rock, hard packed dirt, landfill, or into sandy or muddy job sites. For vehicles operating less than 90%, refer to Off-Highway.
- 100% load going and typical empty return.
- Maximum grades of 12%.

Off-Highway

- Movement of:
  - Heavy equipment, rock, ore, gravel, and minerals at and between mine sites and property development delivery sites
  - Farm produce, or feed, on farm properties
  - Raw petroleum products; i.e.: Oil Field applications
  - Logs, chips, and pulp between logging sites and / or mills.
- Vehicles:
  - Operating in ice road environments
  - Used for refuse / recycle landfill operations.
- Operation exceeding 10% of the time on maintained gravel, crushed rock, hard packed dirt, landfill, ice roads, unimproved surfaces such as loose dirt, mud, and sand.

FC
Fast Change style brake shoes, with standard thickness lining.

FC XLII
Fast Change style brake shoes, with extra thick lining.

Jounce
The maximum amount of upward axle travel, from ride height toward the frame, allowed by the suspension (Figure 11).

Liftable Axle
An axle used to increase the load carrying capacity of the truck or trailer it is used under. When the vehicle is not loaded, and the extra load carrying ability is not needed, the driver can lift the axle. Usually there is a button or lever in the cab of the truck to operate the hydraulic suspension to lift the axle. On trailers there is a push/pull button to serve the same purpose.

Rebound
Maximum amount of downward axle travel, from ride height toward the ground, allowed by the suspension (Figure 11).

Static Load Radius (SLR)
Distance, expressed in inches, from the center of a tire/wheel assembly to the pavement, measured when mounted on a vehicle and loaded to its maximum rated capacity.

Tire Inflation Systems (TIS)
Tire inflation systems replenish air when tire pressure drops below a target pressure. Hendrickson has TIREMAAX TIS systems which can maintain tire inflation and exhaust excess air (deflation) as needed.

Tire Rolling Radius
See SLR

TOFC
Top of Flat Car or Trailer On Flat Car - refers to transporting a trailer by rail. When done so, one or two trailers are lifted and placed on a flat bed rail car for continued transport, then lifted off at or near the intended destination.

Torque Balance
Achieved when individual brakes exert the degree of braking force required for each brake in the system to do its fair share of the work.

Track
The distance between the roadside and curbside dual tire center lines on a dual tire arrangement or the distance between the tire center lines on a single tire arrangement.

Trailer Drop
The trailer deck (rear) will drop, when a significant load is quickly added such as a loaded lift truck entering the trailer, sometimes lowering as far as the air springs' internal bumpers will allow. Refer to TRAILER DROP/TRAILER WALK on page 10.

Trailer Walk
Trailer walk is the repetitive forward movement of the trailer, positioned at the loading/unloading dock without a tractor, causing it to move away from the loading dock. This movement is a consequence of the downward trailer movement, (e.g. lift truck moving in and out), combined with the resulting rotation of the suspension's trailing arms, and the corresponding rotation of the tires when the trailer's parking brakes are applied. Refer to TRAILER DROP/TRAILER WALK on page 10.

www.hendrickson-intl.com

HENDRICKSON®

Hendrickson Canada
250 Chrysler Drive, Unit #3
Brampton, ON Canada L6S 6B6
905.789.1030
Fax 905.789.1033

Trailer Commercial Vehicle Systems
2070 Industrial Place SE
Canton, OH 44707-2641 USA

866.RIDEAIR (743.3247)
330.489.0045
Fax 800.696.4416

Hendrickson Mexicana
Circuito El Marqués Sur #29
Parque Industrial El Marqués
Pob. El Colorado, Municipio El Marqués,
Querétaro, México C.P. 76246
+52 (442) 296.3600
Fax: +52 (442) 296.3601

Information contained in this literature was accurate at the time of publication. Product changes may have been made after the copyright date that are not reflected.

T15001 09-13 ECN 22052
© 2013 Hendrickson USA, L.L.C. All Rights Reserved
Printed in United States of America