DESCRIPTION: PLATE, REINFORCEMENT - LCLS-II UPPER TRUSS WELDMENT
CATEGORY: BLOCK PROJECT: LCLSIICryomodule

REV	REVISION CONTROL DOCUMENT	DATES	SIGNATURES	
-	F10039587---RCD		DRAWN	
			APPROVED	

PRELIMINARY
NOT FOR PRODUCTION
OR PURCHASING PURPOSES
UNCONTROLLED COPY
LAST SAVED 09JUN15

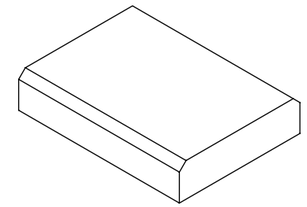

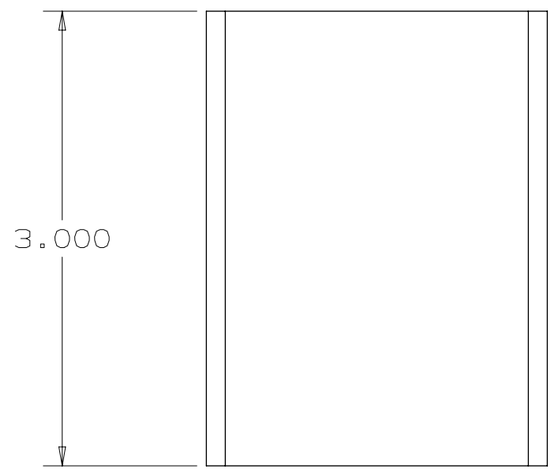

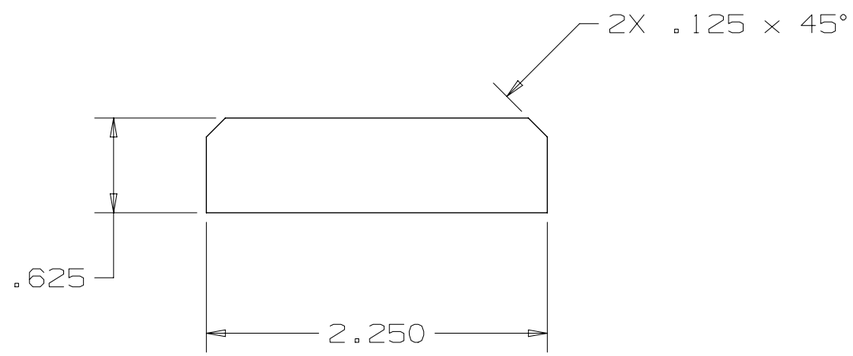

NOTES (UNLESS OTHERWISE SPECIFIED):

1. PART MUST BE FREE OF DIRT, GREASE, OIL, CHIPS, AND BURRS.
2. DIMENSIONS WITH TRAILING ZEROES DENOTE TOLERANCE.

UNLESS OTHERWISE SPECIFIED				
±.X	±.XX	±.XXX	±X/X	±X°
.1	.02	.005	1/16	1°

BREAK ALL SHARP EDGES .015 MAX.
DO NOT SCALE DRAWING
DIMENSIONS BASED ON ASME Y14.5-2009
MAX. ALL MACH SURFACES 125
DRAWING UNITS: INCHES

DRAWN	M.SAWTELL	DATE	01-Apr-2015
CHECKED		DATE	
APPROVED		DATE	

USED ON
F10039189

MATERIAL
ASTM A36 STEEL, UNS K02600

GROUP: Accelerator Mechanical Support
CAGE CODE: 0U5R6

FERMI NATIONAL ACCELERATOR LABORATORY
UNITED STATES DEPARTMENT OF ENERGY

NAME
PLATE, REINFORCEMENT - LCLS-II UPPER TRUSS WELDMENT

SCALE	SIZE	DRAWING NUMBER	SHEET	REV
1:1	B	F10039587	1 OF 1	-