DESCRIPTION: TUBE, 3" x 3" - LCLS-II UPPER TRUSS WELDMENT
CATEGORY: HOLDER PROJECT: LCLSIICryomodule

REV	REVISION CONTROL DOCUMENT	DATES	SIGNATURES	
-	F10039201---RCD		DRAWN	
			APPROVED	

PRELIMINARY
NOT FOR PRODUCTION
OR PURCHASING PURPOSES
UNCONTROLLED COPY
LAST SAVED 09JUN15

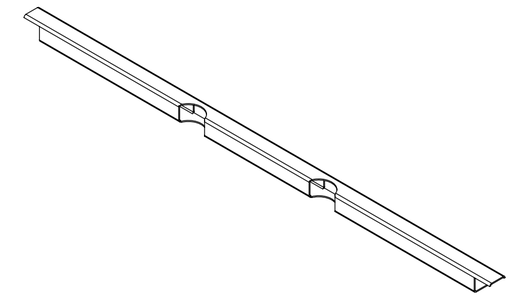

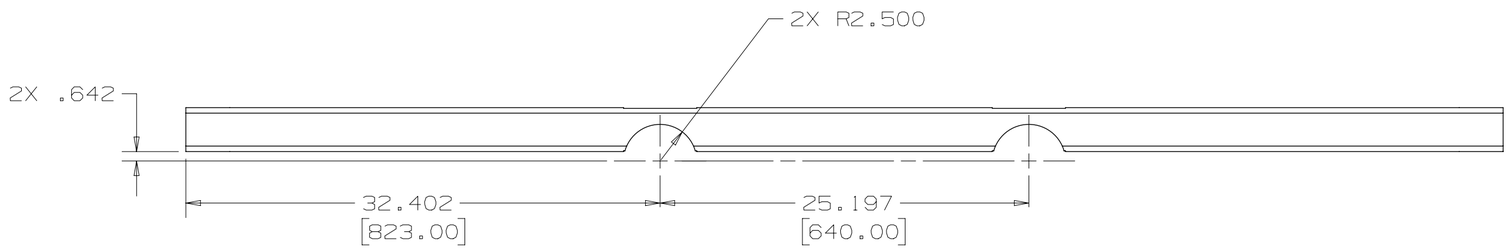

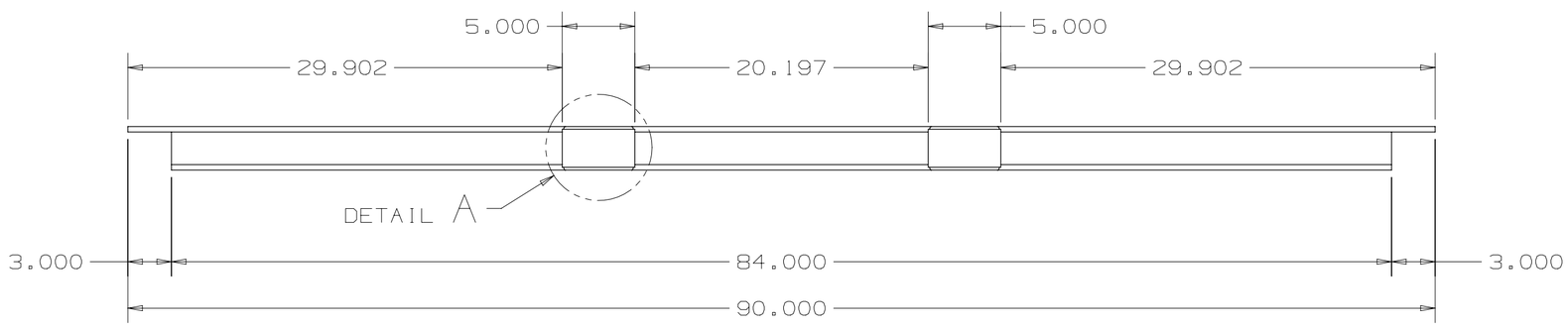

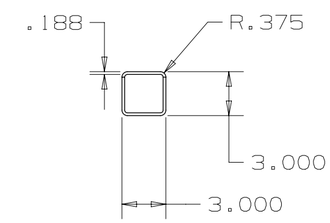

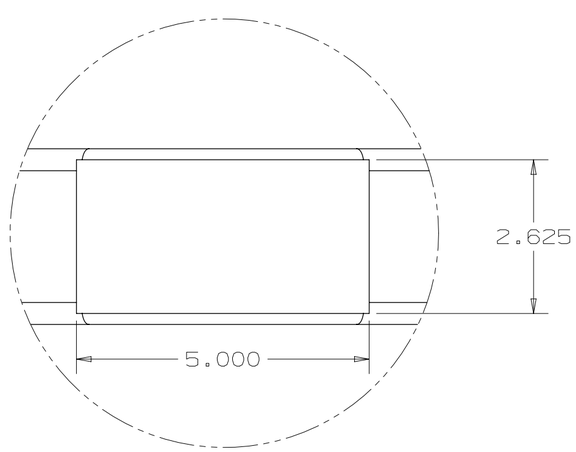

DETAIL A
SCALE 1:2
2 PLACES

NOTES (UNLESS OTHERWISE SPECIFIED):

1. PART MUST BE FREE OF DIRT, GREASE, OIL, CHIPS, AND BURRS.
2. DIMENSIONS WITH TRAILING ZEROES DENOTE TOLERANCE.
3. ALL DIMENSIONS IN BRACKETS [X.XX] ARE IN MILLIMETERS.

UNLESS OTHERWISE SPECIFIED				
±.X	±.XX	±.XXX	±X/X	±X°
.1	.02	.005	1/16	1°

BREAK ALL SHARP EDGES .015 MAX.
DO NOT SCALE DRAWING
DIMENSIONS BASED ON ASME Y14.5-2009
MAX. ALL MACH SURFACES 125
DRAWING UNITS: INCHES

DRAWN	M.SAWTELL	DATE	25-Mar-2015
CHECKED		DATE	
APPROVED		DATE	
USED ON	F10039189		
MATERIAL	ASTM A500 STEEL, GRADE B, UNS K03000		
GROUP: Accelerator Mechanical Support		CAGE CODE: 0U5R6	

FERMI NATIONAL ACCELERATOR LABORATORY
UNITED STATES DEPARTMENT OF ENERGY

NAME
TUBE, 3" x 3" - LCLS-II UPPER TRUSS WELDMENT

SCALE	SIZE	DRAWING NUMBER	SHEET	REV
1:8 AS SHOWN	C	F10039201	1 OF 1	-