DESCRIPTION: GUSSET, CROSSMEMBER - LCLS-II UPPER TRUSS WELDMENT
CATEGORY: PLATE PROJECT: LCLSIICryomodule

REV	REVISION CONTROL DOCUMENT	DATES	SIGNATURES	
-	F10039190---RCD		DRAWN	
			APPROVED	

PRELIMINARY
NOT FOR PRODUCTION
OR PURCHASING PURPOSES
UNCONTROLLED COPY
LAST SAVED 09JUN15

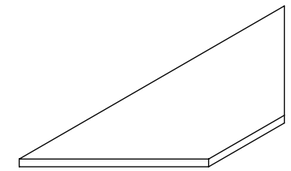

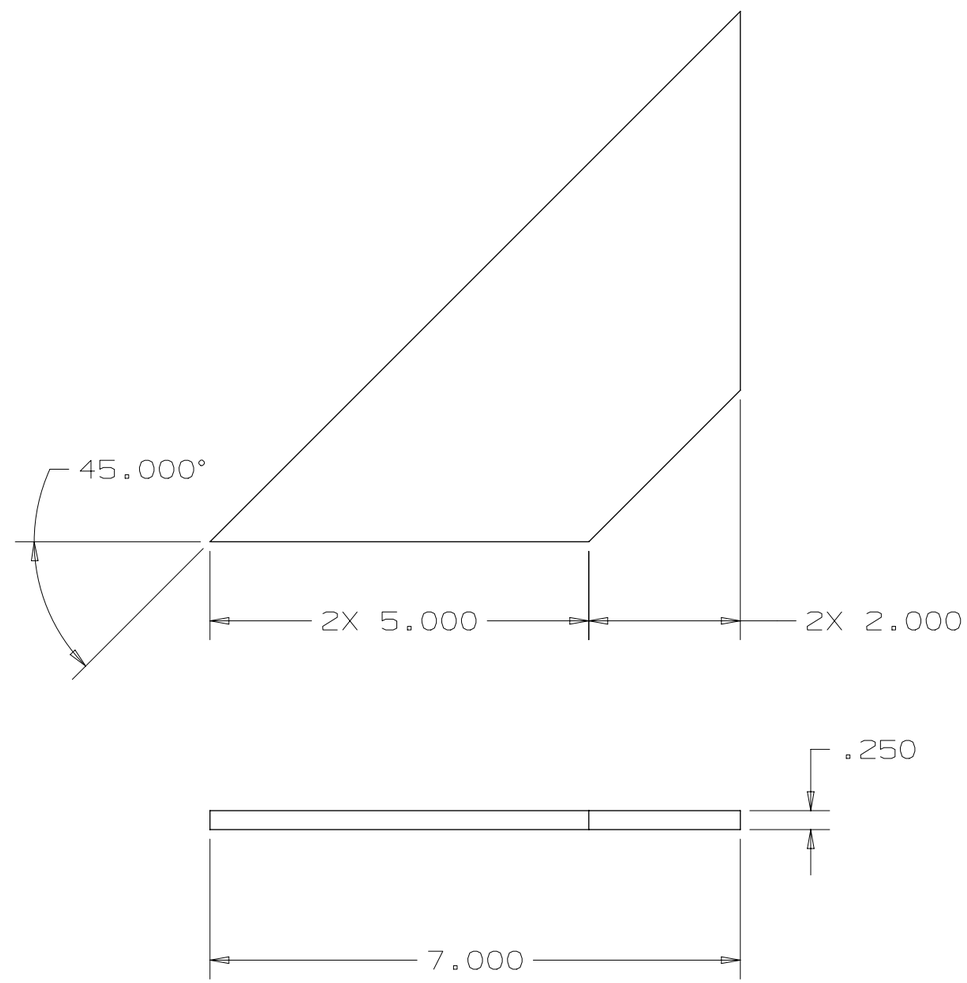

NOTES (UNLESS OTHERWISE SPECIFIED):

1. PART MUST BE FREE OF DIRT, GREASE, OIL, CHIPS, AND BURRS.
2. DIMENSIONS WITH TRAILING ZEROES DENOTE TOLERANCE.

UNLESS OTHERWISE SPECIFIED				
±.X	±.XX	±.XXX	±X/X	±X°
.1	.02	.005	1/16	1°

BREAK ALL SHARP EDGES .015 MAX.
DO NOT SCALE DRAWING
DIMENSIONS BASED ON ASME Y14.5-2009
MAX. ALL MACH SURFACES 125
DRAWING UNITS: INCHES

DRAWN	M.SAWTELL	DATE	25-Mar-2015
CHECKED		DATE	
APPROVED		DATE	

USED ON
F10039189

MATERIAL
ASTM A500 STEEL, GRADE B, UNS K03000

GROUP: Accelerator Mechanical Support
CAGE CODE: 0U5R6

FERMI NATIONAL ACCELERATOR LABORATORY
UNITED STATES DEPARTMENT OF ENERGY

NAME
GUSSET, CROSSMEMBER - LCLS-II UPPER TRUSS WELDMENT

SCALE	SIZE	DRAWING NUMBER	SHEET	REV
1:2 AS SHOWN	B	F10039190	1 OF 1	-