DESCRIPTION: ASSEMBLY, LCLS-II TRANSPORT CAP - END CAP SIDE
CATEGORY: WELDMENT PROJECT:

REV	REVISION CONTROL DOCUMENT	DATES	SIGNATURES	
-	F10040659---RCD		DRAWN	
			APPROVED	

PRELIMINARY
NOT FOR PRODUCTION
OR PURCHASING PURPOSES
UNCONTROLLED COPY
LAST SAVED 28MAY15

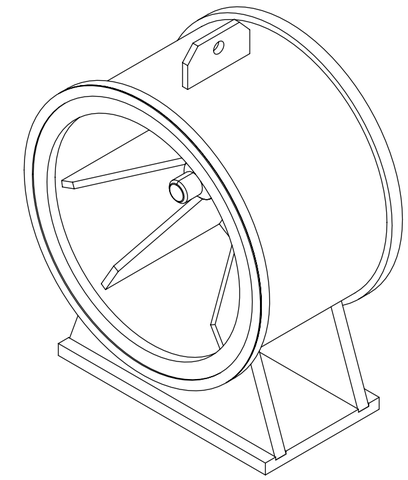

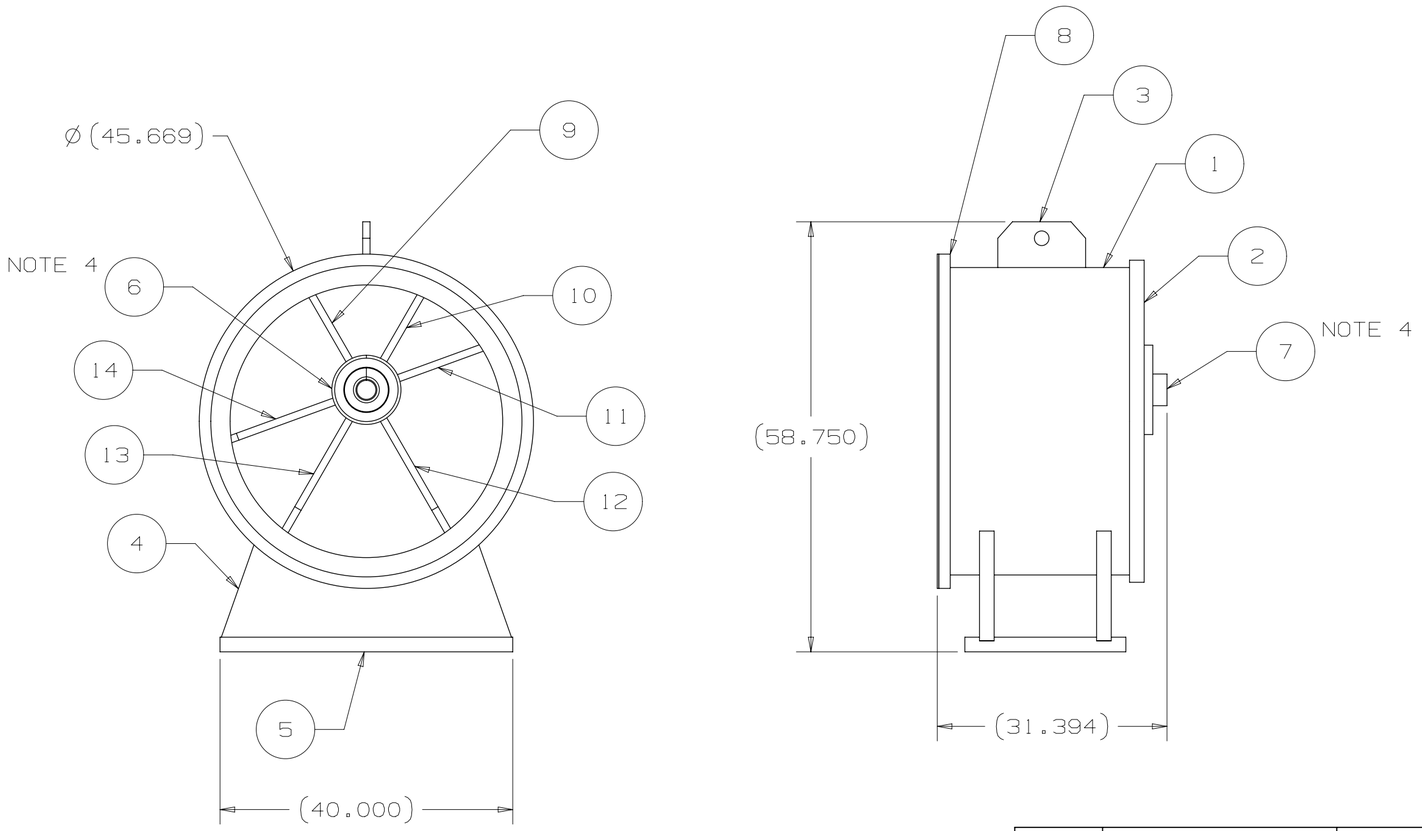

ITEM	PART NUMBER	DESCRIPTION	QTY.
15	F10040699	GUSSET, LCLS-II TRANSPORT CAP - END CAP SIDE	1
14	F10040666	GUSSET, LCLS-II TRANSPORT CAP - END CAP SIDE	1
13	F10040665	GUSSET, LCLS-II TRANSPORT CAP - END CAP SIDE	1
12	F10040664	GUSSET, LCLS-II TRANSPORT CAP - END CAP SIDE	1
11	F10040663	GUSSET, LCLS-II TRANSPORT CAP - END CAP SIDE	1
10	F10040662	GUSSET, LCLS-II TRANSPORT CAP - END CAP SIDE	1
9	F10040661	GUSSET, LCLS-II TRANSPORT CAP - END CAP SIDE	1
8	F10040660	RING, LCLS-II TRANSPORT CAP - END CAP SIDE	1
7	F10040030	SPINDLE, LCLS-II TRANSPORT CAP	1
6	F10040029	PLUG, LCLS-II TRANSPORT CAP	1
5	F10039944	PLATE, FOOT - LCLS-II TRANSPORT CAP	1
4	F10039943	GUSSET, FEET - LCLS-II TRANSPORT CAP	2
3	F10039942	GUSSET, LIFTING EYE - LCLS-II TRANSPORT CAP	1
2	F10039941	PLATE, LCLS-II TRANSPORT CAP	1
1	F10039923	TUBE, LCLS-II TRANSPORT CAP	1

PARTS LIST

NOTES (UNLESS OTHERWISE SPECIFIED):

1. WELDMENT MUST BE FREE OF DIRT, GREASE, OIL, CHIPS, AND BURRS.
2. DIMENSIONS WITH TRAILING ZEROES DENOTE TOLERANCE.
3. ESTIMATED WEIGHT (FACTORING WELDING): 1,700 LBS.
4. 'DUMMY PART' OF DESY ORIGINS - REDESIGN TO LCLS-II SPECIFICATIONS STILL IN PROGRESS

UNLESS OTHERWISE SPECIFIED				
±.X	±.XX	±.XXX	±X/X	±X°
.1	.02	.005	1/16	1°

BREAK ALL SHARP EDGES .015 MAX.
DO NOT SCALE DRAWING
DIMENSIONS BASED ON ASME Y14.5-2009
MAX. ALL MACH SURFACES 125
DRAWING UNITS: INCHES

DRAWN	M.SAWTELL	DATE	27-Apr-2015
CHECKED		DATE	
APPROVED		DATE	
USED ON	F10039188		
MATERIAL	SEE PARTS LIST		
GROUP: Accelerator Mechanical Support		CAGE CODE: 0U5R6	

FERMI NATIONAL ACCELERATOR LABORATORY
UNITED STATES DEPARTMENT OF ENERGY

NAME: ASSEMBLY, LCLS-II TRANSPORT CAP - END CAP SIDE

SCALE	SIZE	DRAWING NUMBER	SHEET	REV
1:16 AS SHOWN	C	F10040659	1 OF 1	-