REV.	DESCRIPTION	DRAWN	DATE
		APPD.	DATE
	NEW RELEASE-ER #8880		

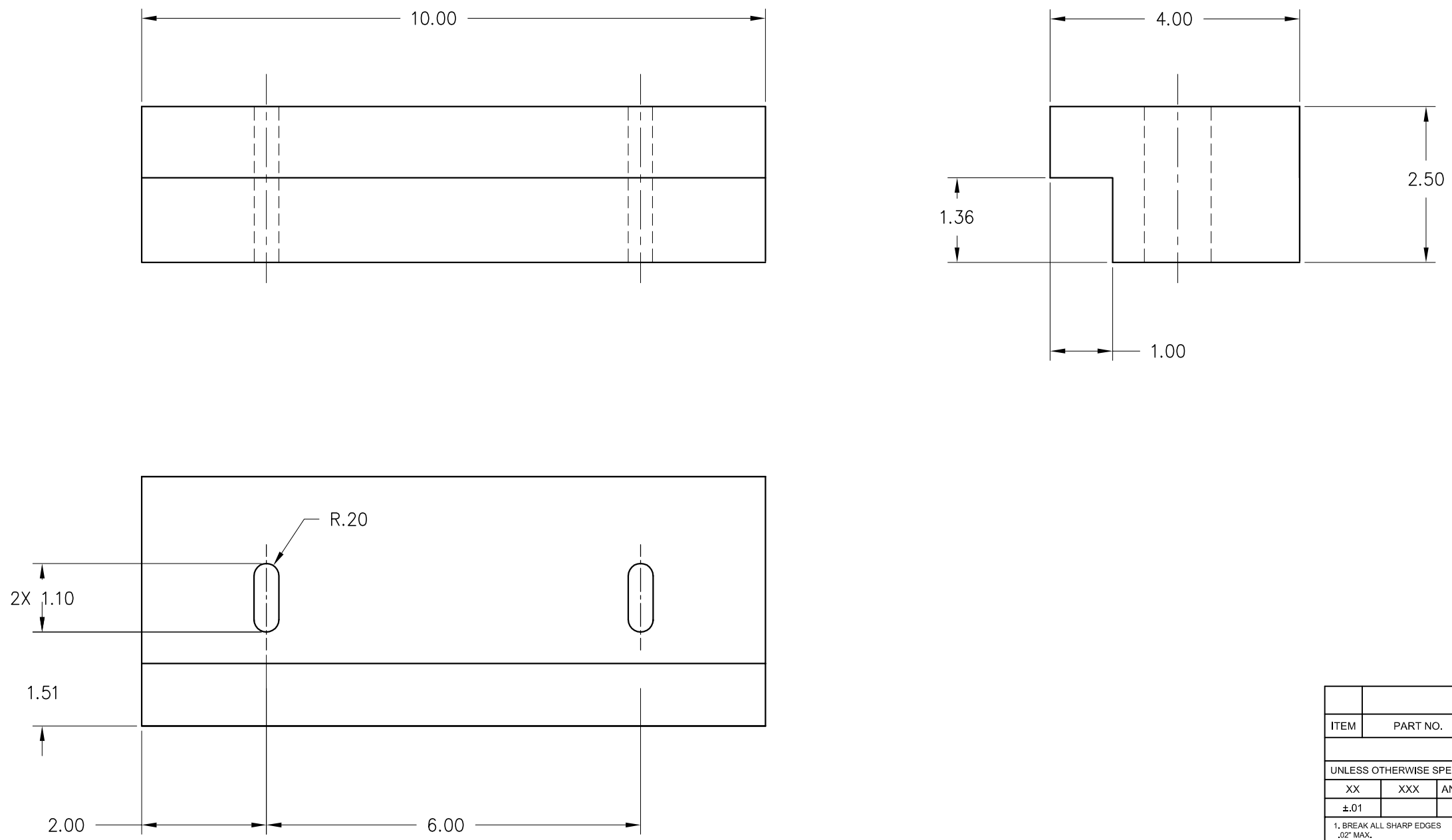

NOTES:

1. BLACK FINISH.

ITEM	PART NO.	DESCRIPTION OR SIZE	QTY.

PARTS LIST

UNLESS OTHERWISE SPECIFIED			ORIGINATOR		
XX	XXX	ANGLES	DRAWN	E.BORISSOV	11/27/07
±.01		±1°	CHECKED	E.BORISSOV	11/27/07
			APPROVED	T.ARKAN	11/27/07

1. BREAK ALL SHARP EDGES .02" MAX.
2. DO NOT SCALE DRAWING
3. DIMENSIONS BASED UPON ANSI Y14.5M-1982
4. MAX. ALL MACH. SURFACES 125

USED ON: 5525-ME-443548

MATERIAL: STEEL ASTM A36

FERMI NATIONAL ACCELERATOR LABORATORY
UNITED STATES DEPARTMENT OF ENERGY

SRF CRYOMODULE ASSEMBLY FACILITY
CRYOMODULE TRANSPORT FIXTURE
CLAMP PLATE

SCALE	SOFTWARE	DRAWING NUMBER	REV.
1:2	AUTOCAD	5525-MB-443550	

FILE: