REV.	DESCRIPTION	DRAWN / APPD.	DATE / DATE
	NEW RELEASE-ER #8880		

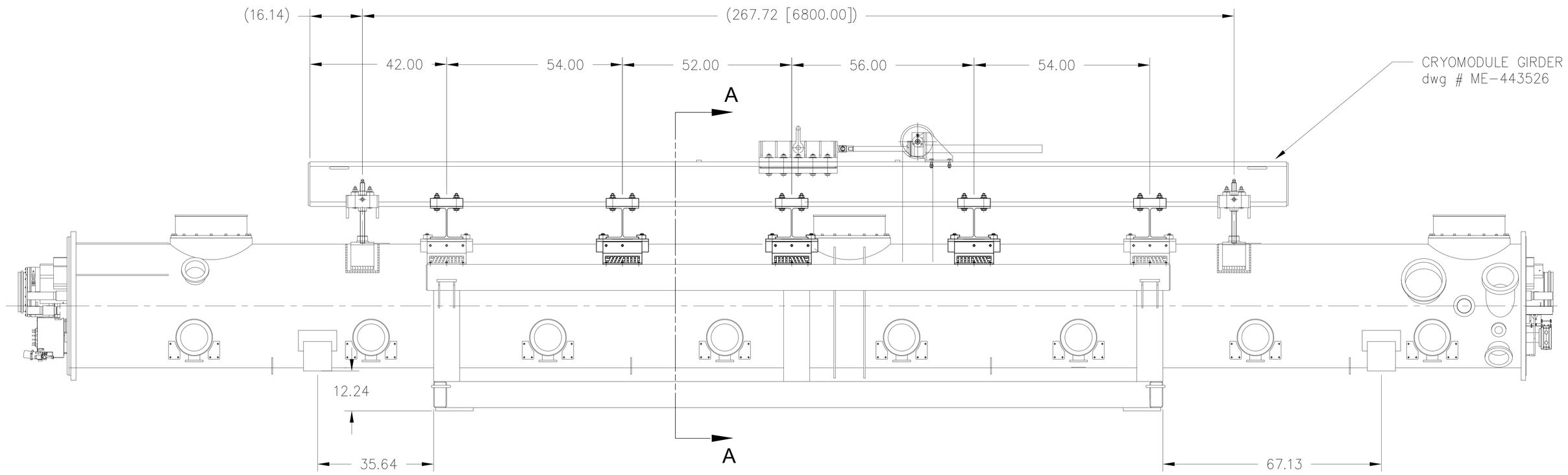

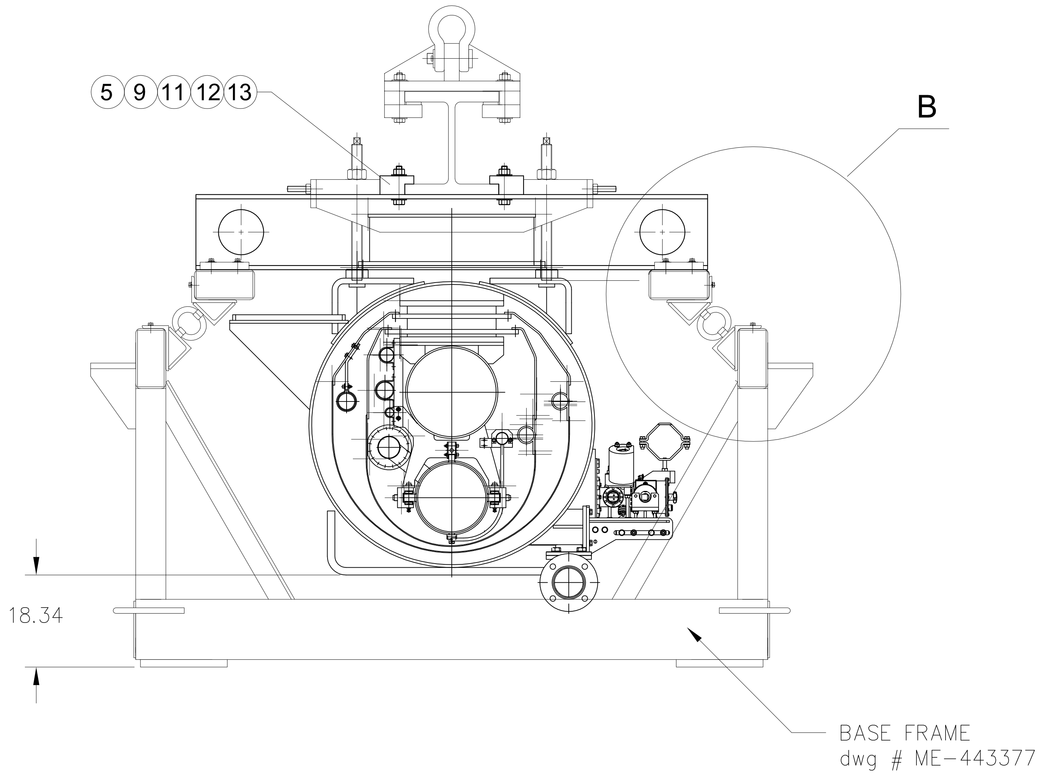

SECTION A-A

SCALE 1:10

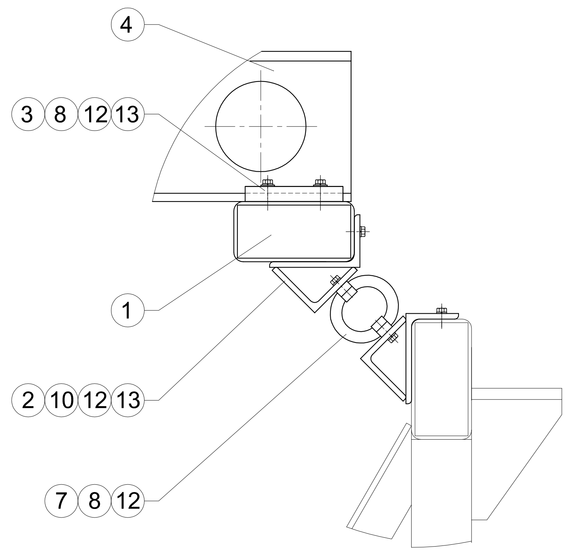

DETAIL B

SCALE 1:5

ITEM	PART NO.	DESCRIPTION OR SIZE	QTY.
13		FLAT WASHER 3/8 ZINK-PLATED	78
12		SPRING WASHER 3/8 REGULAR ZINK-PLATED	84
11		HEX NUT 3/8-16 ZINK-PLATED	20
10		SCREW CAP HD 3/8-16x1.25 SST	36
9		SCREW HEX HD 3/8-16x4.50 5 GR ZINC-PLATED	20
8		SCREW HEX HD 3/8-16x1.75 5 GR ZINC-PLATED	96
7		SHOCK ISOLATOR M24-400-08-A	12
6			
5	MB-443550	CLAMP PLATE	10
4	MB-443549	CROSS BEAM	5
3	MB-443502	CLAMP PLATE	12
2	MC-443501	ISOLATOR BRACKET WELDMENT	12
1	MC-443378	ISOLATOR SPACER WELDMENT	6

PARTS LIST

UNLESS OTHERWISE SPECIFIED

.XX .XXX ANGLES

1. BREAK ALL SHARP EDGES .02" MAX.
2. DO NOT SCALE DRAWING
3. DIMENSIONS BASED UPON ANSI Y14.5M-1982
4. MAX. ALL MACH. SURFACES

ORIGINATOR		
DRAWN	E.BORISSOV	11/27/07
CHECKED	E.BORISSOV	11/27/07
APPROVED	T.ARKAN	11/27/07
USED ON:		
MATERIAL:		

FERMI NATIONAL ACCELERATOR LABORATORY
UNITED STATES DEPARTMENT OF ENERGY

SRF CRYOMODULE ASSEMBLY FACILITY
CRYOMODULE TRANSPORT FIXTURE
ASSEMBLY

SCALE	FILMED	DRAWING NUMBER	REV.
1:15		5525-ME-443548	

CREATED WITH AUTOCAD