REV.	DESCRIPTION	DRAWN / APPD.	DATE / DATE
	NEW RELEASE-ER #8590		
A	DIMENSION 1.50 WAS 1.10. ECO #8884	E.BORISSOV / T.ARKAN	

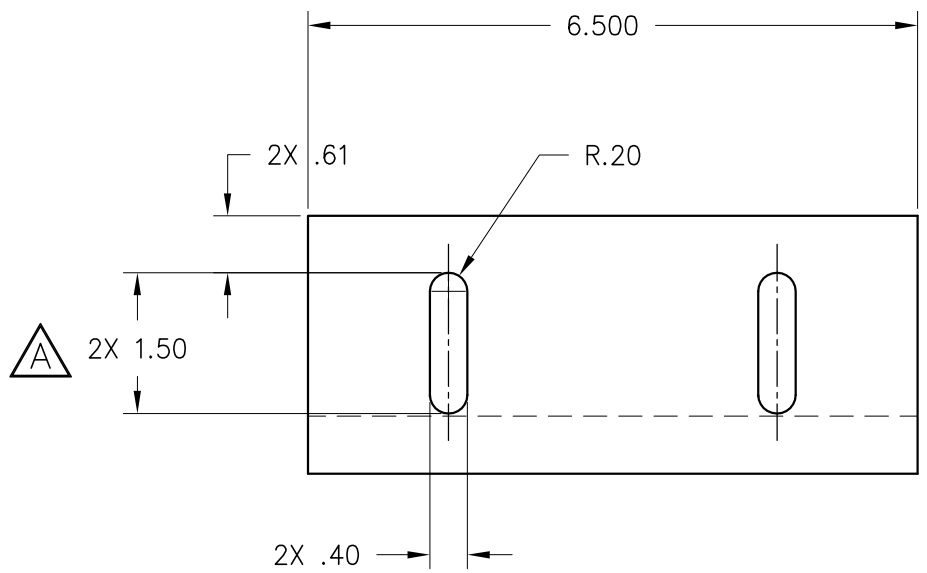

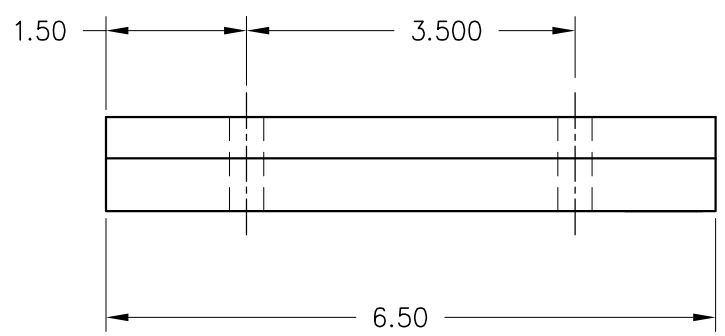

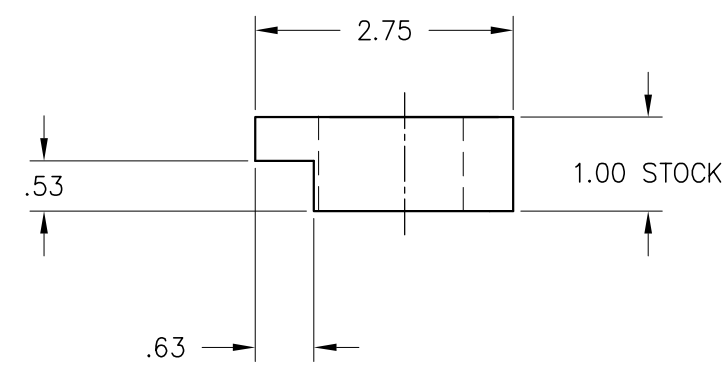

NOTES:

1. BLACK FINISH

ITEM	PART NO.	DESCRIPTION OR SIZE	QTY.

PARTS LIST

UNLESS OTHERWISE SPECIFIED			ORIGINATOR		
XX	XXX	ANGLES	DRAWN	E.BORISSOV	18/12/05
±.01	±.005	±1°	CHECKED	E.BORISSOV	18/12/05
			APPROVED	T.ARKAN	18/12/05

1. BREAK ALL SHARP EDGES .02" MAX.
2. DO NOT SCALE DRAWING
3. DIMENSIONS BASED UPON ANSI Y14.5M-1982
4. MAX. ALL MACH. SURFACES 125

USED ON: 5525-MC-443377

MATERIAL: MEDIUM CARBON STEEL

FERMI NATIONAL ACCELERATOR LABORATORY
UNITED STATES DEPARTMENT OF ENERGY

SRF CRYOMODULE ASSEMBLY FACILITY
COLD MASS TRANSPORT FIXTURE
CLAMP PLATE

SCALE	SOFTWARE	DRAWING NUMBER	REV.
1:2	AUTOCAD	5525-MB-443502	A

FILE: