REV.	DESCRIPTION	DRAWN	DATE
		APPD.	DATE
	NEW RELEASE-ER #8590		

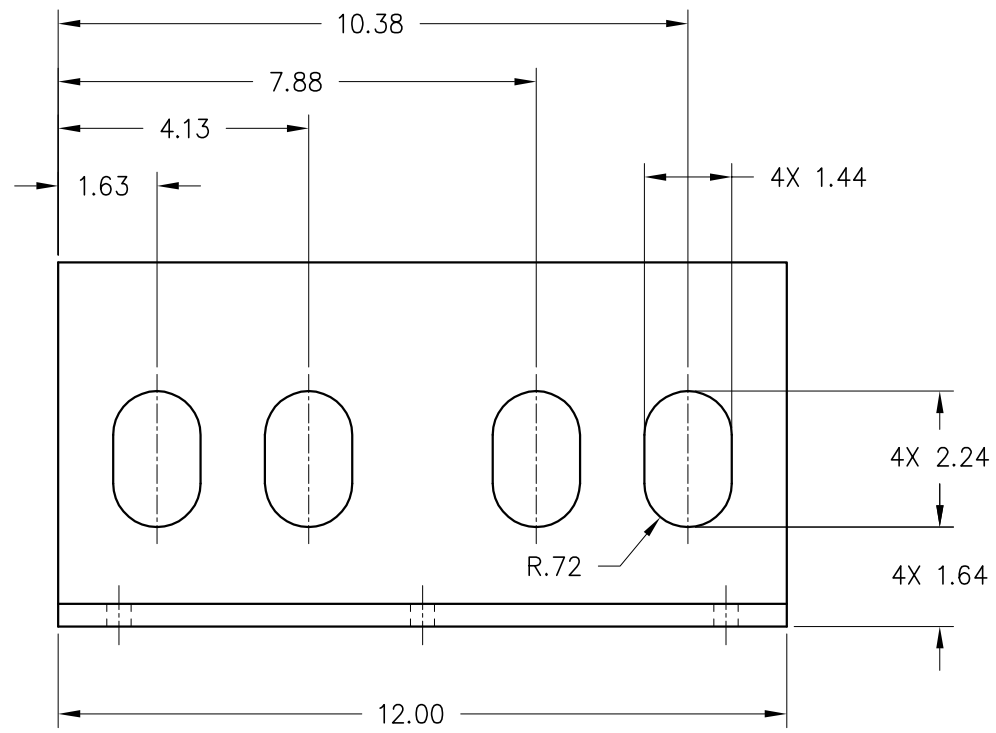

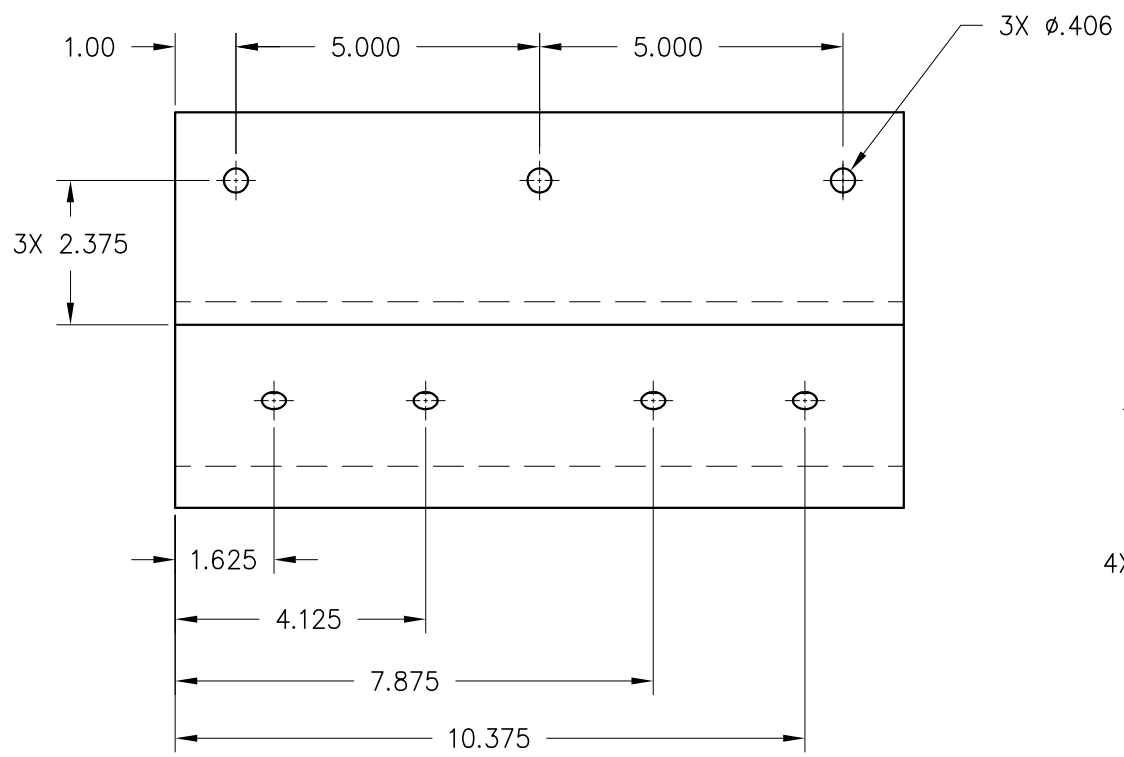

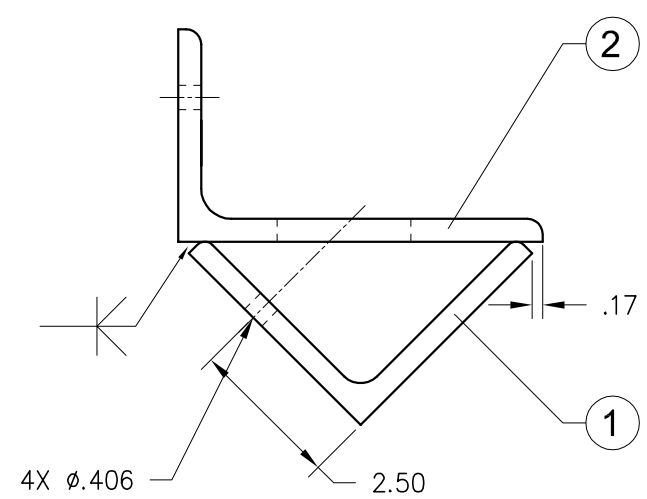

ITEM	PART NO.	DESCRIPTION OR SIZE	QTY.
2		ANGLE 6x3.5x.375 Lg=12.00 ASTM A36	1
1		ANGLE 4x4x.375 Lg=12.00 ASTM A36	1

PARTS LIST

UNLESS OTHERWISE SPECIFIED			ORIGINATOR		
.XX	.XXX	ANGLES	DRAWN	E.BORISSOV	8/13/07
±.02	±.01	±1°	CHECKED	E.BORISSOV	8/13/07
			APPROVED	T.ARKAN	8/15/07

1. BREAK ALL SHARP EDGES .02" MAX.
2. DO NOT SCALE DRAWING
3. DIMENSIONS BASED UPON ANSI Y14.5M-1982
4. MAX. ALL MACH. SURFACES

USED ON: 5525-ME-443376

MATERIAL:

FERMI NATIONAL ACCELERATOR LABORATORY
UNITED STATES DEPARTMENT OF ENERGY

SRF CRYOMODULE ASSEMBLY FACILITY
COLD MASS TRANSPORT FIXTURE
ISOLATOR BRACKET WELDMENT

SCALE	FILMED	DRAWING NUMBER	REV.
1:2		5525-MC-443501	

CREATED WITH AUTOCAD

NOTES:

1. FINISH: RED COLOR PAINT COATING.