DESCRIPTION: WELDMENT, ISOLATION FIXTURE - LCLS-II TRANSPORT CAGE
CATEGORY: WELDMENT PROJECT: LCLSIICryomodule

REV	REVISION CONTROL DOCUMENT	DATES	SIGNATURES	
-	F10039628---RCD		DRAWN	
			APPROVED	

PRELIMINARY
NOT FOR PRODUCTION
OR PURCHASING PURPOSES
UNCONTROLLED COPY
LAST SAVED 16JUN15

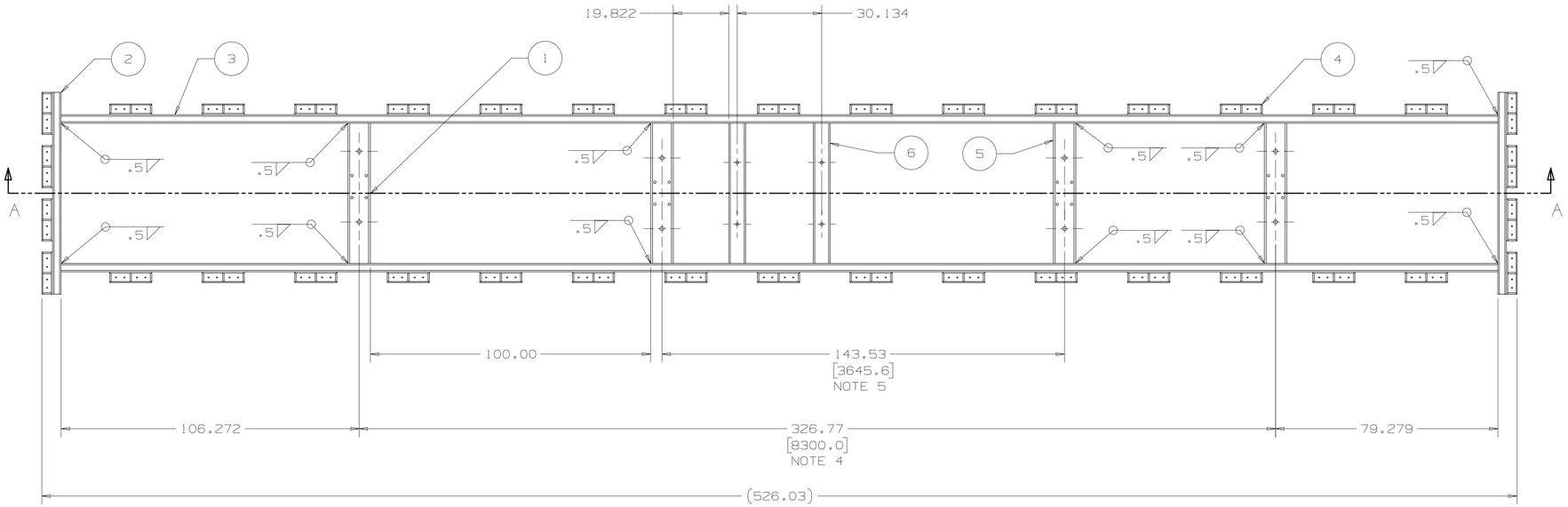

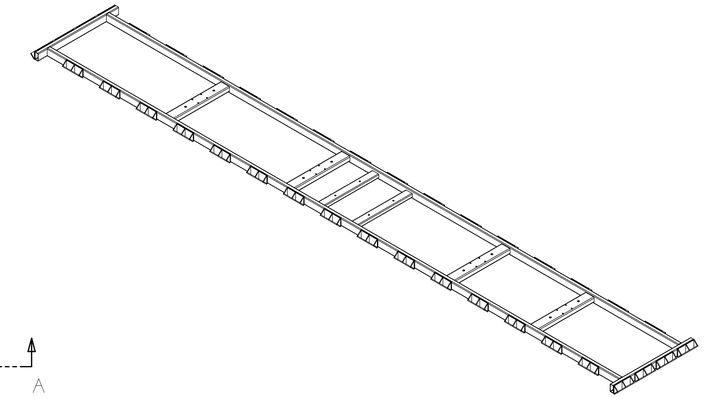

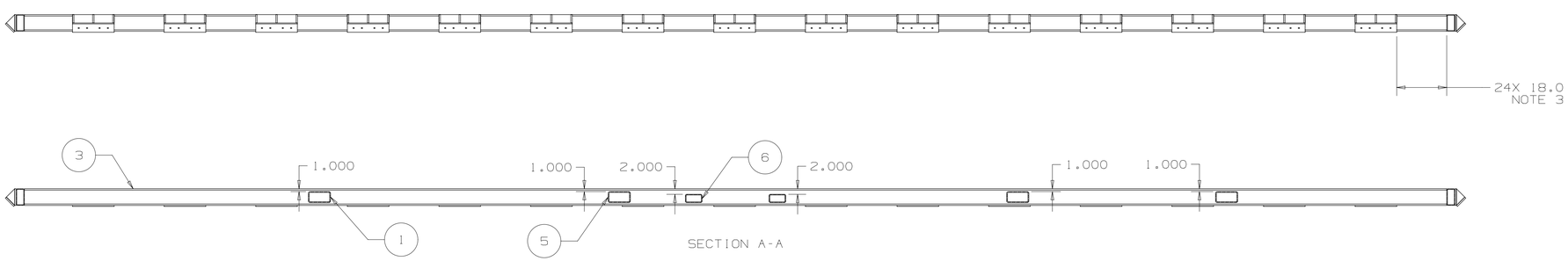

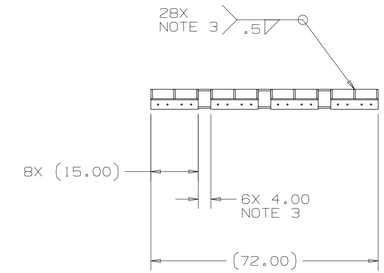

ITEM	PART NUMBER	DESCRIPTION	QTY.
6	F10042862	TUBE, 6" X 3" - LCLS-II TRANSPORT CAGE	2
5	F10040838	TUBE, 8" X 4" - LCLS-II TRANSPORT CAGE	2
4	F10040013	WELDMENT, COMPRESSION SPRING - LCLS-II TRANSPORT CAGE	38
3	F10039637	TUBE, 6" X 3" - LCLS-II TRANSPORT CAGE	2
2	F10039631	TUBE, 6" X 3" - LCLS-II TRANSPORT CAGE	2
1	F10039630	TUBE, 8" X 4" - LCLS-II TRANSPORT CAGE	2

PARTS LIST

NOTES (UNLESS OTHERWISE SPECIFIED):

1. ASSEMBLY MUST BE FREE OF DIRT, GREASE, OIL, CHIPS, AND BURRS.
2. DIMENSIONS WITH TRAILING ZEROES DENOTE TOLERANCE.
3. ITEM 4 ARE TO BE WELDED TO ITEMS 2 AND 3 USING DIMENSIONS SHOWN.
4. DIMENSION CORSPONDS WITH LCLS-II 1.3 GHZ CRYOMODULE.
5. DIMENSION CORSPONDS WITH LCLS-II 3.9 GHZ CRYOMODULE.

UNLESS OTHERWISE SPECIFIED				
±.X	±.XX	±.XXX	±X/X	±X°
.1	.02	.005	1/16	1°

BREAK ALL SHARP EDGES .015 MAX.
DO NOT SCALE DRAWING
DIMENSIONS BASED ON ASME Y14.5-2009
MAX. ALL MACH SURFACES 125
DRAWING UNITS: INCHES

DRAWN	M.SAWTELL	DATE	02-Apr-2015
CHECKED		DATE	
APPROVED		DATE	
USED ON	F10039627		
MATERIAL	SEE PARTS LIST		
GROUP: Accelerator Mechanical Support		CAGE CODE: 0U5R6	

FERMI NATIONAL ACCELERATOR LABORATORY
UNITED STATES DEPARTMENT OF ENERGY

NAME
WELDMENT, ISOLATION FIXTURE - LCLS-II TRANSPORT CAGE

SCALE	SIZE	DRAWING NUMBER	SHEET	REV
1:24	D	F10039628	1 OF 1	-