REV	DESCRIPTION	DRAWN	DATE
		APPROVED	DATE

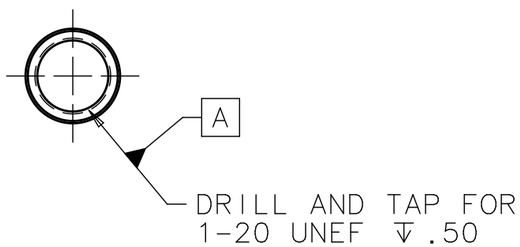

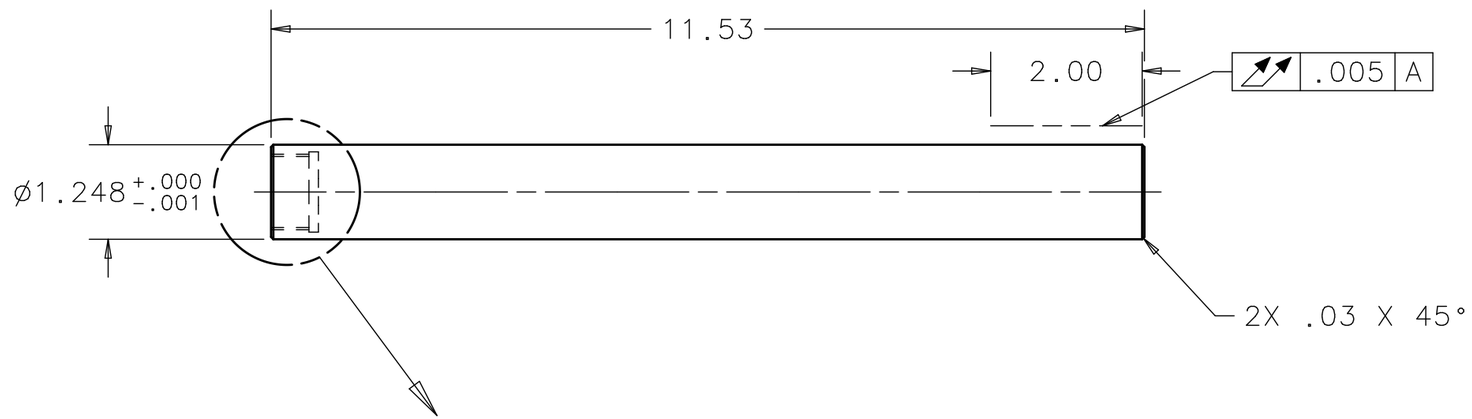

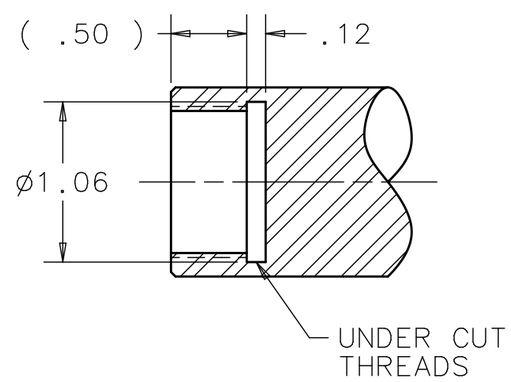

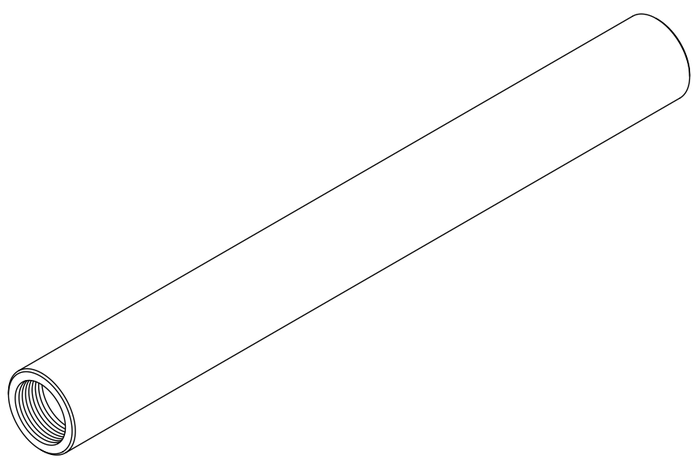

UNLESS OTHERWISE SPECIFIED			ORIGINATOR	M.MCGEE	11-MAR-2010
.XX	.XXX	ANGLES	DRAWN	D.HURD	06-OCT-2010
± .02	± .005	± 1°	CHECKED	M.MCGEE	14-OCT-2010
			APPROVED	M.MARTENS	15-OCT-2010

1. BREAK ALL SHARP EDGES .015 MAX.
2. DO NOT SCALE DRAWING.
3. DIMENSIONS BASED UPON ASME Y14.5M-1994
4. MAX. ALL MACH. SURFACES 125
5. DRAWING UNITS: U.S. INCH

USED ON: MC-433559

MATERIAL: ASTM A36 STEEL

FERMI NATIONAL ACCELERATOR LABORATORY
UNITED STATES DEPARTMENT OF ENERGY

NOVA-ANU TARGET HALL
MEDIUM ENERGY TARGET BAFFLE
US REMOTE CONN.-CHECKING MANDREL

SCALE	DRAWING NUMBER	SHEET	REV
1/2	8875.112-MB-433626	1 OF 1	

CREATED WITH : Ideas12NXSeries | GROUP: ACCELERATOR MECH. SUPPT.

Created: 14:20:44 on 28-12-11 (D-M-Y) By: rstewart State: 3-RELEASED