| REV | DESCRIPTION | DRAWN | DATE |
|---|---|---|---|
| | | APPROVED | DATE |
| A | 2.844 DIMENSION WAS 3.375, HOLE DEPTH WAS CHANGED FROM .50 TO .62, FEATURE CONTROL ADDED | R.STEWART | 02-DEC-2010 |
| | | M.MCGEE | 06-DEC-2010 |
| B | COUNTERBORE REMOVED | R.STEWART | 13-MAR-2012 |
| | | M.MCGEE | 13-MAR-2012 |

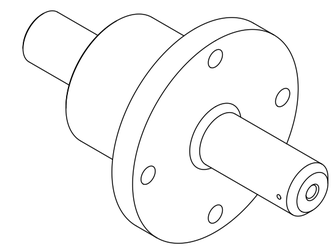

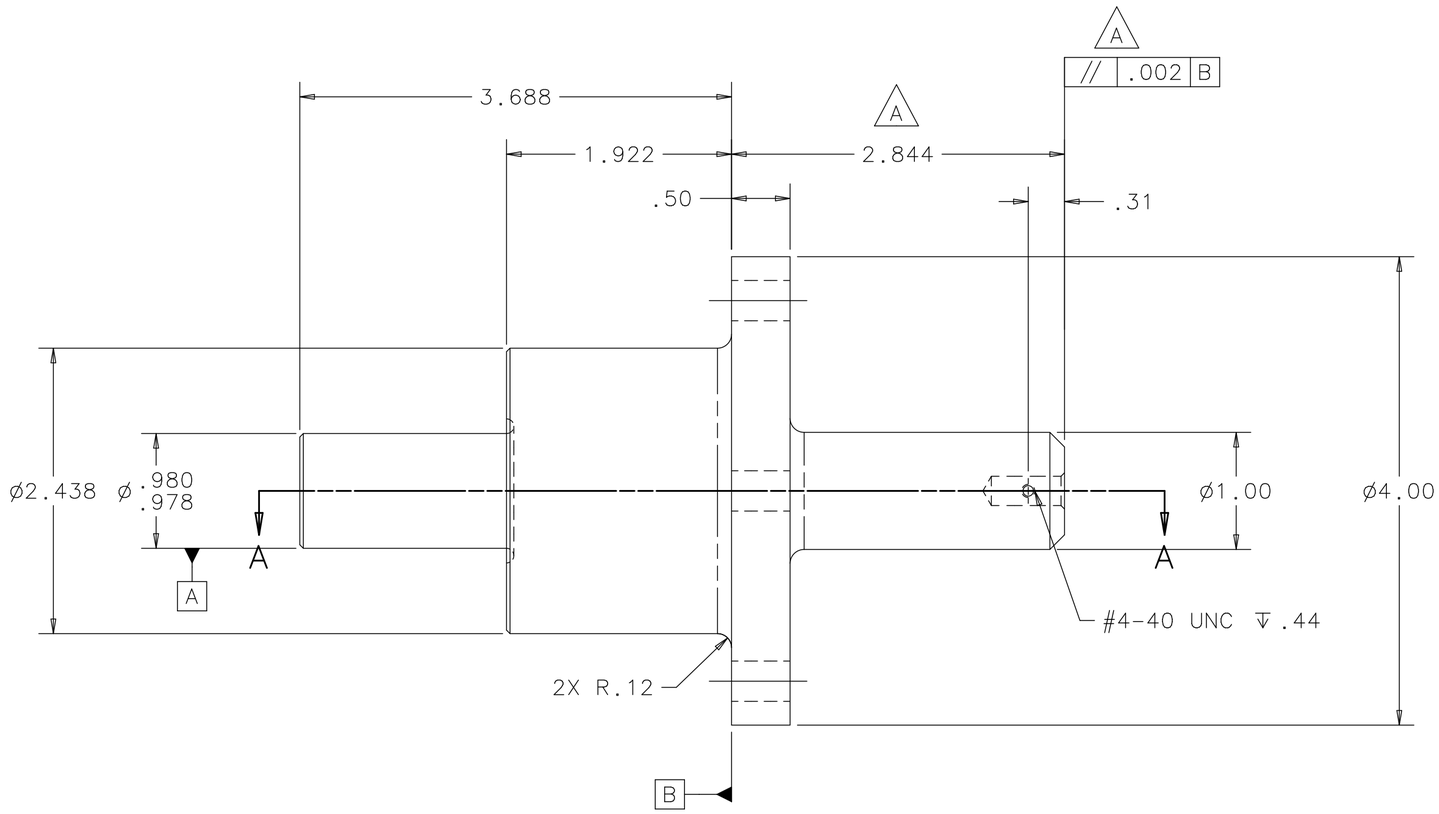


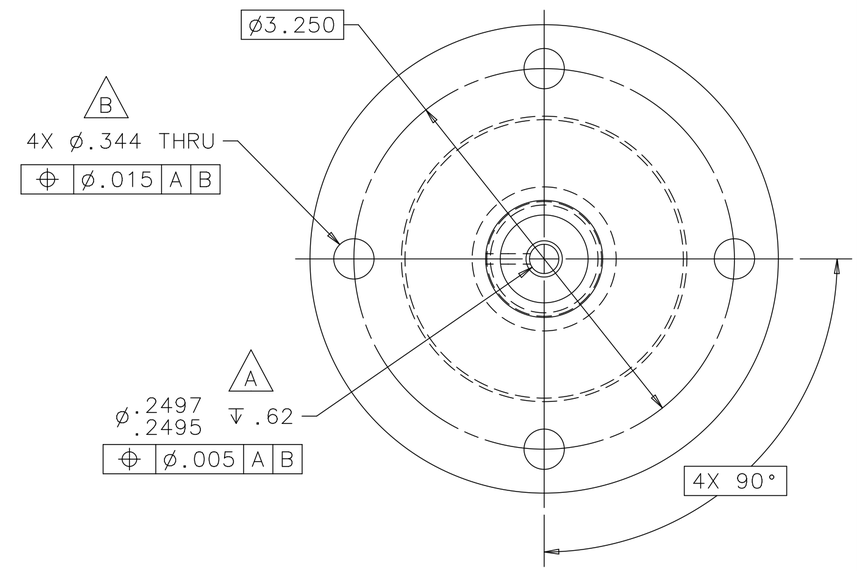


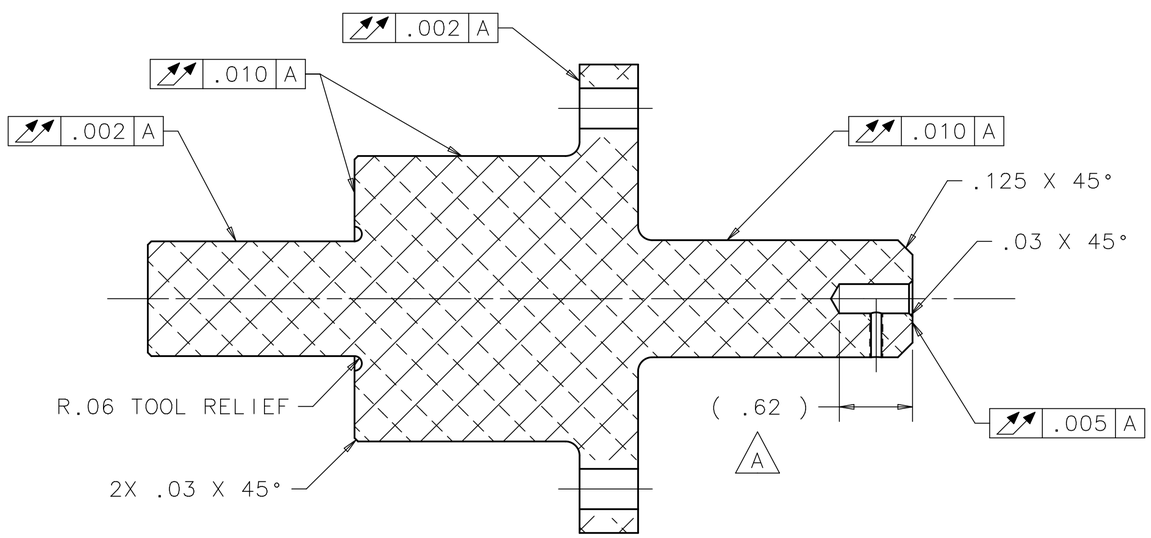


| UNLESS OTHERWISE SPECIFIED | | | ORIGINATOR | M.MCGEE | 11-MAR-2010 |
|---|---|---|---|---|---|
| .XX | .XXX | ANGLES | DRAWN | D.HURD | 22-SEP-2010 |
| ± .03 | ± .005 | ± 1° | CHECKED | M.MCGEE | 14-OCT-2010 |
| 1. BREAK ALL SHARP EDGES .015 MAX. 2. DO NOT SCALE DRAWING. 3. DIMENSIONS BASED UPON ASME Y14.5M-1994 4. MAX. ALL MACH. SURFACES 125 ✓ 5. DRAWING UNITS: U.S. INCH | | | APPROVED | M.MARTENS | 15-OCT-2010 |
| | | | USED ON | MD-433565 MD-433577 | |
| | | | MATERIAL | 6061-T6511 ALUMINUM ø4.00 COLD FINISHED ROUND | |

FERMI NATIONAL ACCELERATOR LABORATORY
UNITED STATES DEPARTMENT OF ENERGY

# NOVA-ANU TARGET HALL MEDIUM ENERGY TARGET BAFFLE FRAME HANGER PIVOT STUD

| SCALE | DRAWING NUMBER | SHEET | REV |
|---|---|---|---|
| FULL | 8875.112-MC-433578 | 1 OF 1 | B |

CREATED WITH : Ideas12NXSeries GROUP: ACCELERATOR MECH. SUPPT.