REV	DESCRIPTION	DRAWN	DATE
		APPROVED	DATE
A	ø.188 THRU HOLES REMOVED	R.STEWART	26-NOV-2011
		M.MCGEE	28-DEC-2011

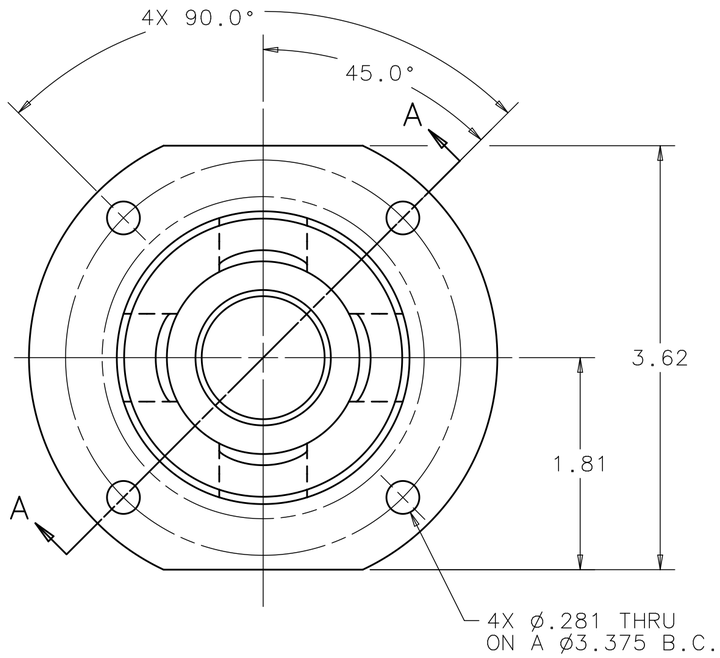

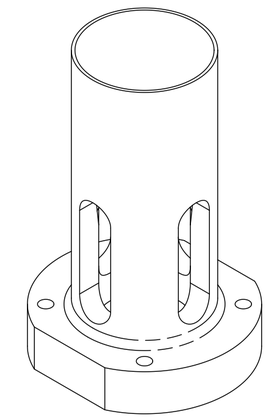

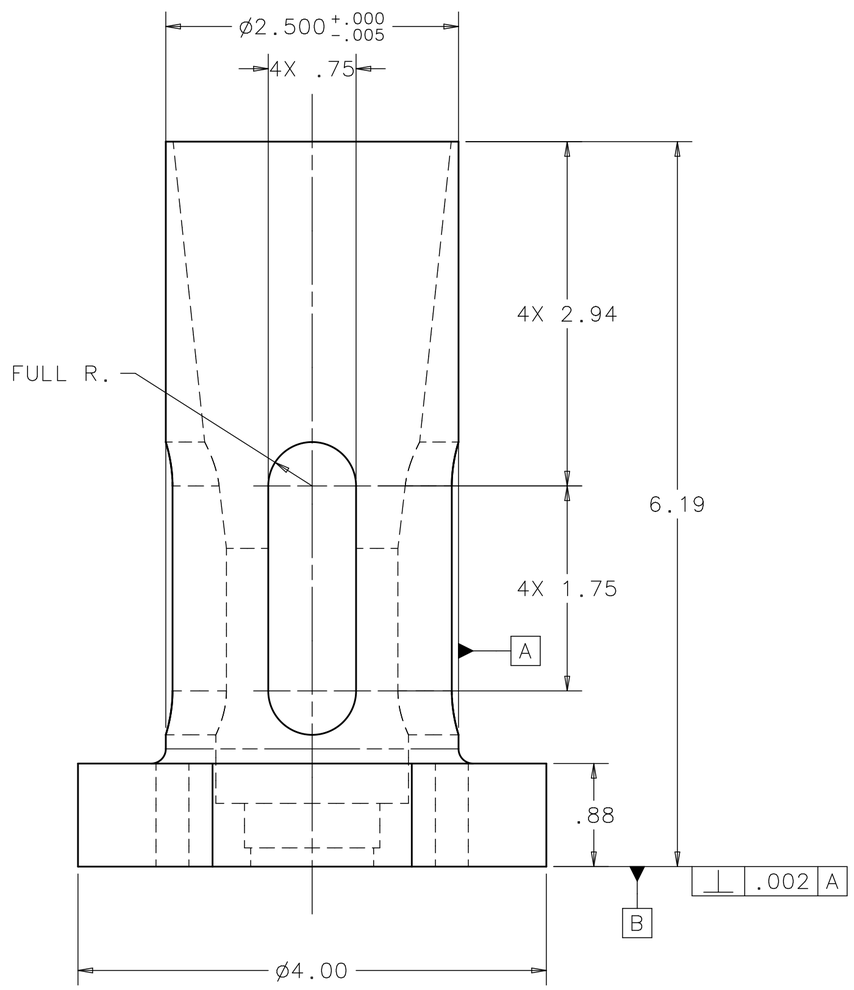

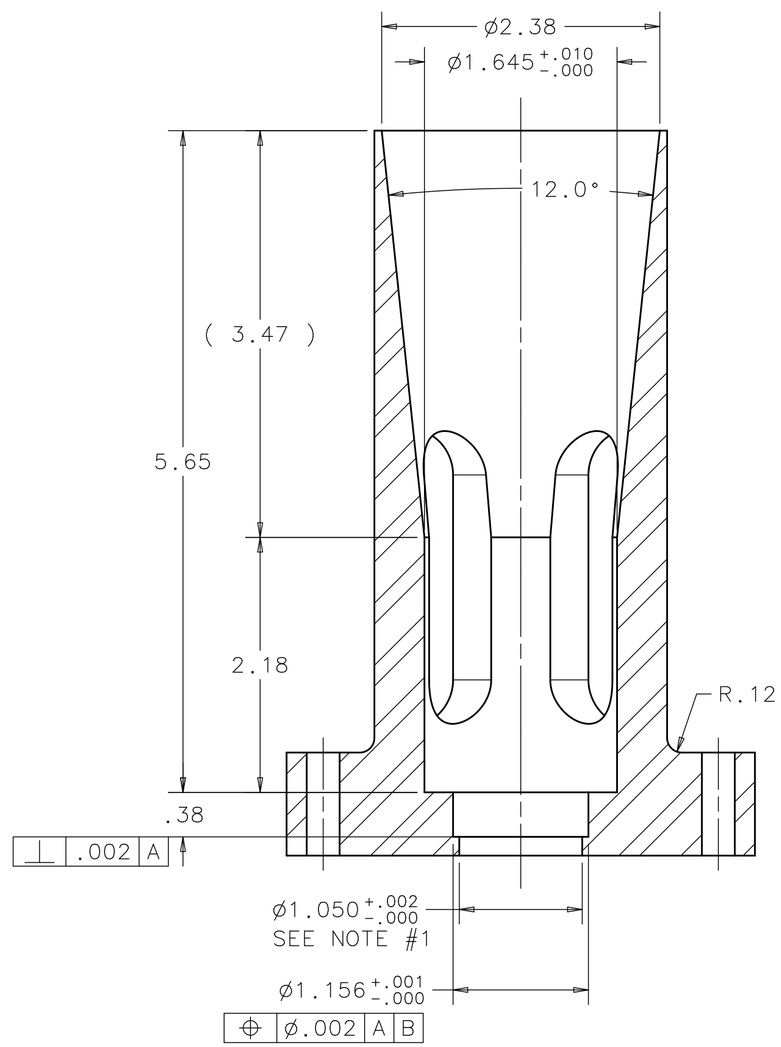

SECTION A-A

NOTES:

1. TOLERANCE TO APPLY AFTER VERIFYING ø1.050 DIMENSION ON DRAWINNG MB-433558

UNLESS OTHERWISE SPECIFIED			ORIGINATOR	M.MCGEE	11-MAR-2010
.XX	.XXX	ANGLES	DRAWN	D.HURD	21-SEP-2010
± .03	± .005	± 1°	CHECKED	M.MCGEE	14-OCT-2010
			APPROVED	M.MARTENS	15-OCT-2010

1. BREAK ALL SHARP EDGES .015 MAX.
2. DO NOT SCALE DRAWING.
3. DIMENSIONS BASED UPON ASME Y14.5M-1994
4. MAX. ALL MACH. SURFACES 125
5. DRAWING UNITS: U.S. INCH

USED ON: MC-433559

MATERIAL: 316L STAINLESS STEEL ø4 ROUND ANNEALED AND ROUGH TURNED

FERMI NATIONAL ACCELERATOR LABORATORY
UNITED STATES DEPARTMENT OF ENERGY

NOVA-ANU TARGET HALL MEDIUM ENERGY TARGET BAFFLE U.S. REMOTE CONNECTOR BODY

SCALE	DRAWING NUMBER	SHEET	REV
FULL	8875.112-MC-433557	1 OF 1	A

CREATED WITH : Ideas12NXSeries GROUP: ACCELERATOR MECH. SUPPT.