| REV | DESCRIPTION | DRAWN | DATE |
|---|---|---|---|
| | | APPROVED | DATE |
| A | ø1.090/ø1.1230 WAS ø1.290/ø1.2450<br>1 1/4-7 UNC WAS 1 5/16 UN<br>MATL. WAS ø3 1/2 TYPE 304 STAINLESS STEEL | G SMITH | 1/21/04 |
| | | E.M.V. | 1/21/04 |
| B | MATERIAL WAS NAVAL BRONZE C464<br>QUARTER HARD MIN. | S. OPLT | 17-JUN-2005 |
| | | K. ANDERSON | 17-JUN-2005 |
| C | ADDED 1/8" DEEP GROOVE TO AID<br>IN WIRING SCREWS AT ASSEMBLY. | DGH | 16-SEP-2008 |
| | | V.SIDOROV | 9-17-08 |

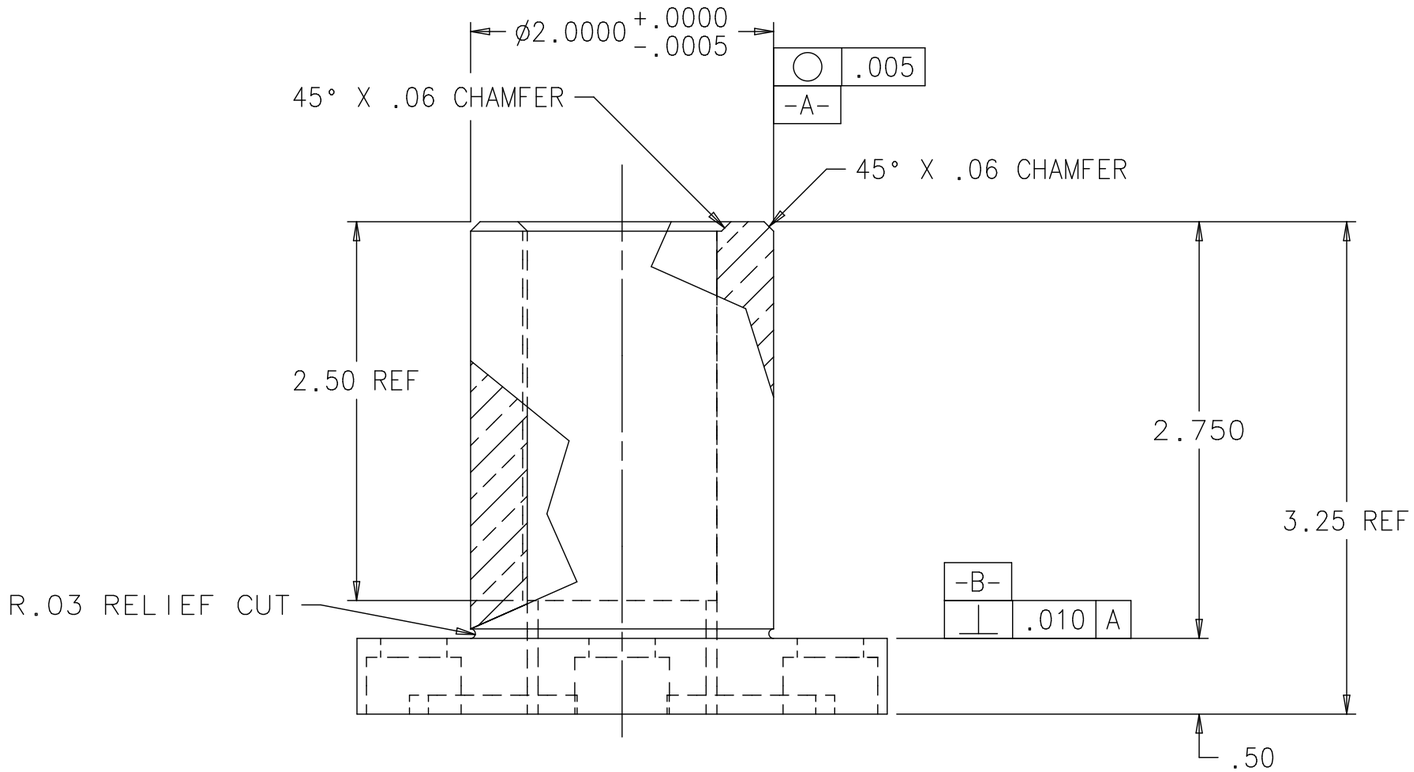


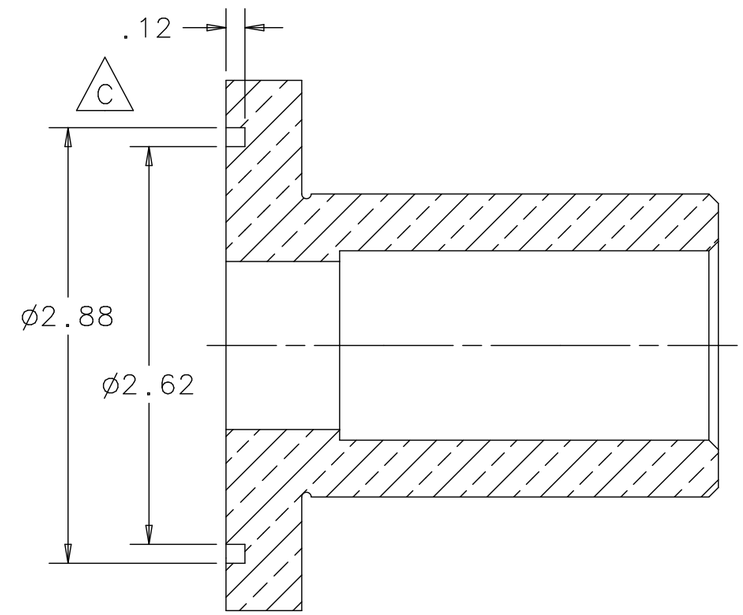


SECTION A-A

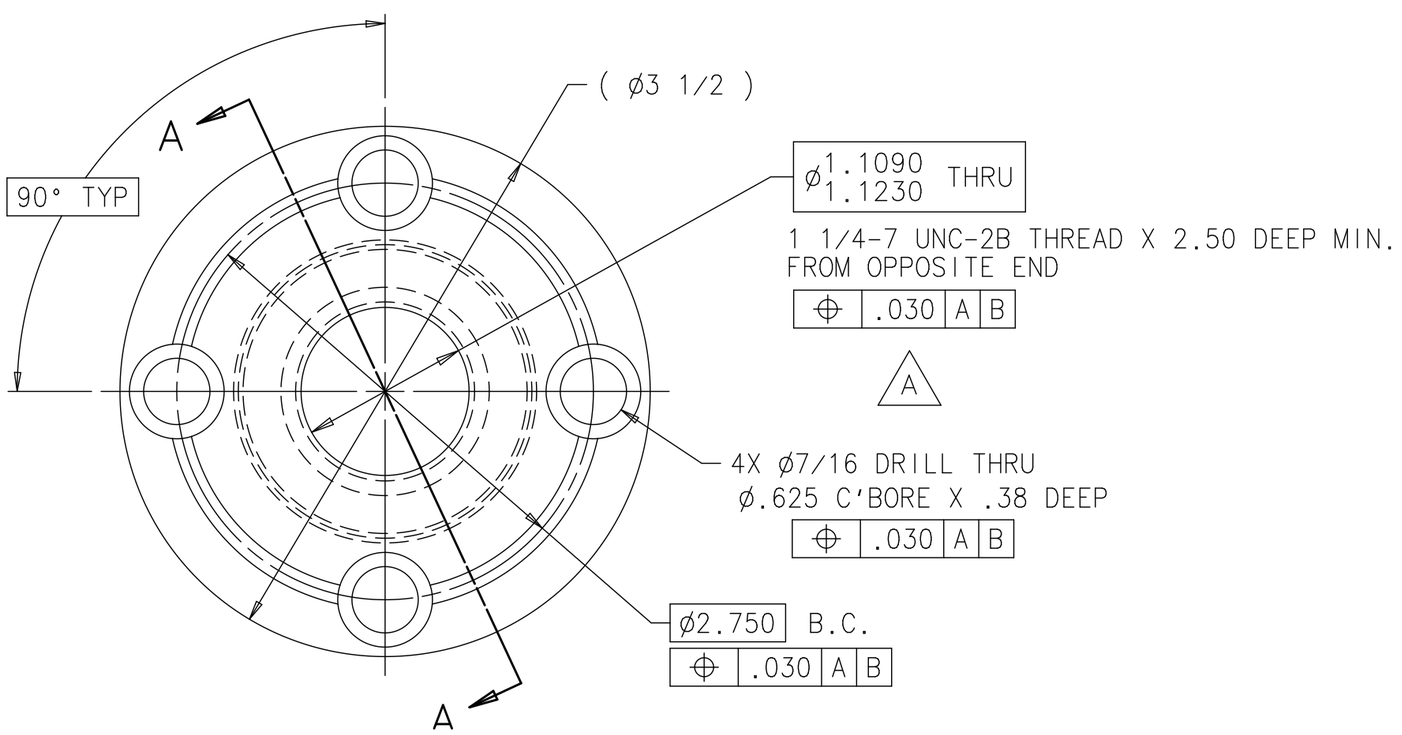


| UNLESS OTHERWISE SPECIFIED | | | ORIGINATOR | E.VILLEGAS | 03-FEB-2003 |
|---|---|---|---|---|---|
| .XX | .XXX | ANGLES | DRAWN | N.GRINNELL | 19-MAR-2003 |
| ± .03 | ± .005 | ± 1° | CHECKED | W.CYKO | 11-JUN-2003 |
| | | | APPROVED | E.VILLEGAS | 11-JUN-2003 |

1. BREAK ALL SHARP EDGES .015 MAX.
2. DO NOT SCALE DRAWING.
3. DIMENSIONS BASED UPON ASME Y14.5M-1994
4. MAX. ALL MACH. SURFACES 125
5. DRAWING UNITS: U.S. INCH

USED ON: MD-427799

MATERIAL: NAVAL BRASS C464 UNLEADED (A) (B)

**FERMI NATIONAL ACCELERATOR LABORATORY**
**UNITED STATES DEPARTMENT OF ENERGY**

PPD/MECHANICAL DEPARTMENT
NUMI TARGET HALL TARGET BAFFLE
DRAW BAR NUT - UPSTREAM

| SCALE | DRAWING NUMBER | SHEET | REV |
|---|---|---|---|
| 1:1 | 8875.112-MB-427798 | 1 OF 1 | C |

CREATED WITH : Ideas12NXSeries | GROUP: ACCELERATOR MECH. SUPPT.