REV	DESCRIPTION	DRAWN / APPROVED	DATE / DATE
A	CHANGED FROM WELDMENT TO SOLID PIECE, ADDED FILLET CHANGED 1/2" HOLE TO .501 HOLE	S. OPLT	3/31/05
		K. ANDERSON	13-APR-2005

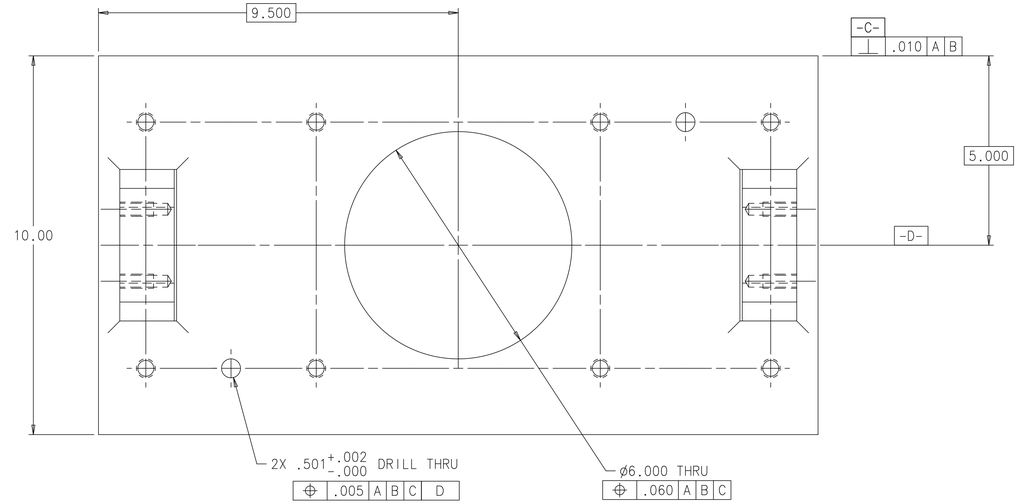

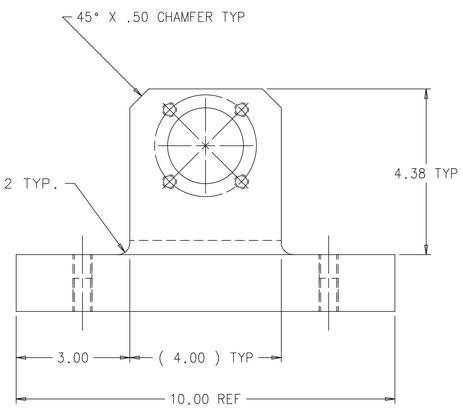

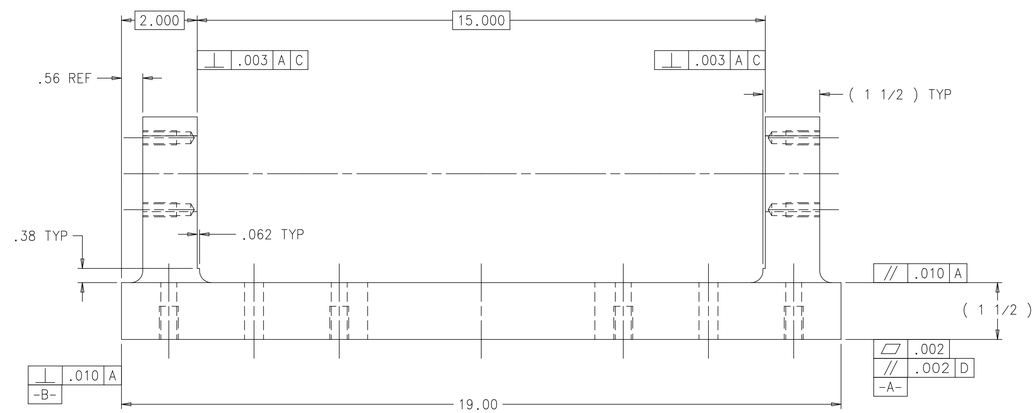

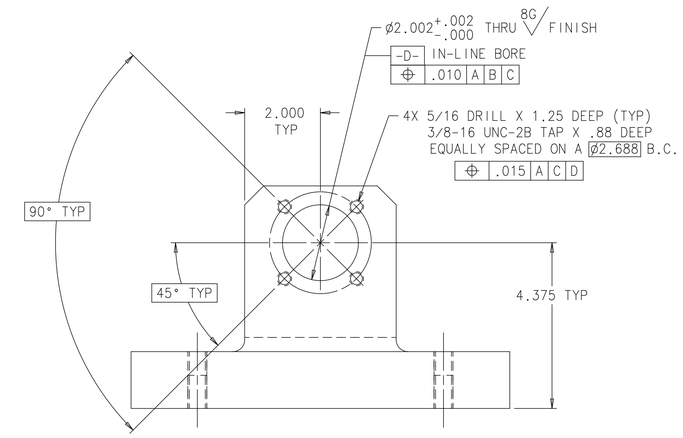

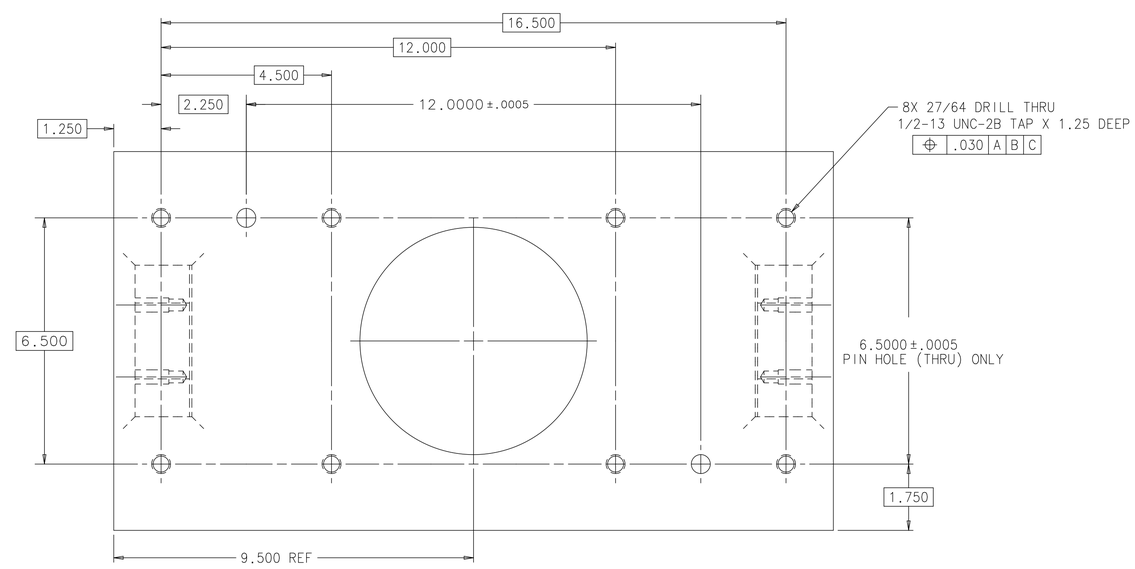

NOTE: APPROXIMATE WEIGHT = 80 LBS.

UNLESS OTHERWISE SPECIFIED			ORIGINATOR	E.VILLEGAS	03-FEB-2003
.XX	.XXX	ANGLES	DRAWN	N.GRINNELL	14-MAR-2003
± .03	± .005	± .5°	CHECKED	W.CYKO	11-JUN-2003
1. BREAK ALL SHARP EDGES .015 MAX. 2. DO NOT SCALE DRAWING. 3. DIMENSIONS BASED UPON ANSI Y14.5M-1982 4. ALL DIMENSIONS ARE INCHES 5. MAX. ALL MACH. SURFACES 125			APPROVED	E.VILLEGAS	11-JUN-2003
			USED ON	MD-427772	
			MATERIAL	6061-T6 ALUMINUM	

FERMI NATIONAL ACCELERATOR LABORATORY
UNITED STATES DEPARTMENT OF ENERGY

PPD/MECHANICAL DEPARTMENT
NUMI, TARGET HALL, TARGET BAFFLE
PIVOT BLOCK -DS

SCALE	DRAWING NUMBER	SHEET	REV
1:2	8875.112-MD-427771	1 OF 1	A

CREATED WITH : Ideas11NXSeries | GROUP: ACCELERATOR MECH. SUPPT.