REV	DESCRIPTION	DRAWN	DATE
		APPROVED	DATE
A	ADDED MD-427772 TO USED ON.	DGH	07-FEB-2008
		V.SIDOROV	02/25/08

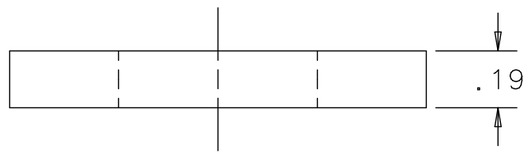

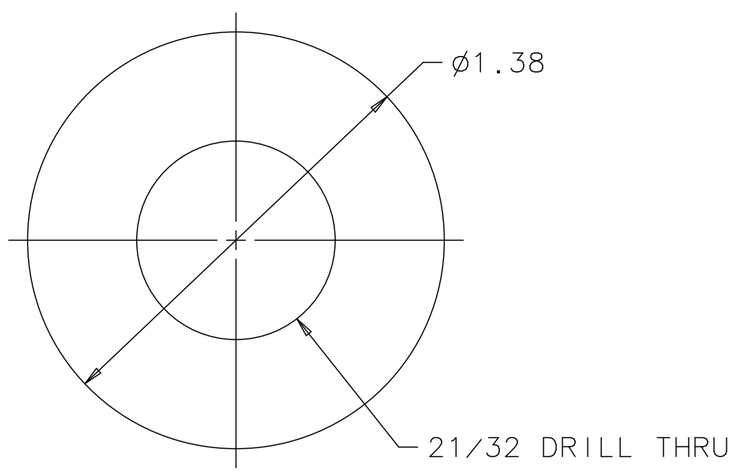

UNLESS OTHERWISE SPECIFIED			ORIGINATOR	R.SILVA	13-APR-2001
.XX	.XXX	ANGLES	DRAWN	W.CYKO	13-APR-2001
± .01	±	±	CHECKED	C.NILA	09-JUL-2001
1. BREAK ALL SHARP EDGES MAX. 2. DO NOT SCALE DRAWING. 3. DIMENSIONS BASED UPON ASME Y14.5M-1994 4. MAX. ALL MACH. SURFACES 125 5. DRAWING UNITS: U.S. INCH			APPROVED	R.SILVA	09-JUL-2001
			USED ON	ME-406087	
			MATERIAL	440C S.S. THROUGH HARDEN TO RC 55-60 FINISH: PASSIVATED	

FERMI NATIONAL ACCELERATOR LABORATORY
UNITED STATES DEPARTMENT OF ENERGY

PPD/MECHANICAL DEPT.
HORN1 ASSY.
PIVOT SHAFT WASHER,MODULE ASSY.

SCALE	DRAWING NUMBER	SHEET	REV
2X	8875.111-MB-406082	1 OF 1	A

CREATED WITH : Ideas12NXSeries | GROUP: ACCELERATOR MECH. SUPPT.

Created: 15:43:49 on 12-10-10 (D-M-Y) By: hurd State: 1-INITIAL