REV	DESCRIPTION	DRAWN / APPROVED	DATE / DATE
A	ø2.253 WAS ø2.250, ø1.718 WAS ø1.752, REVISED MATERIAL	B. CYKO	10-17-02
		R. SILVA	10-17-02
B	ADDED NOTE #1; UPDATED USED ON	G. WAVER	7/31/03
		K. ANDERSON	5/25/06
C	ADDED MD-427772 TO USED ON. MODIFIED NOTE #1.	DGH	07-FEB-2008
		V.SIDOROV	02/25/08
D	ADDED ME-363677 TO USED ON. MODIFIED NOTE #1.	G. WAVER	7/30/08
		Y. HE	7/31/08
E	ø2.265 DIM. WAS ø2.253; ADDED AFTER FINAL MACHINING	G. WAVER	3/18/09
		K. ANDERSON	3/18/09

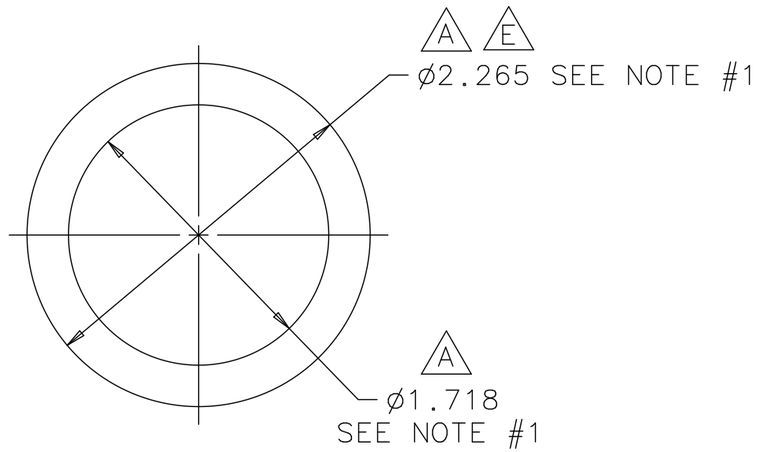

NOTES:

E D B 1.) SEE DRAWING MD-406110 OR MD-472772 OR ME-363677 SHT. #2 FOR O.D. AND I.D. FINAL MACHINING.

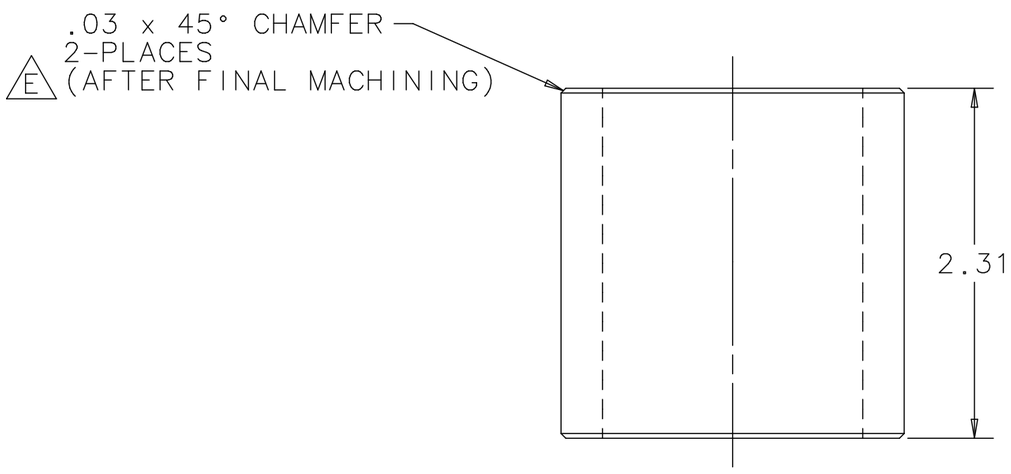

UNLESS OTHERWISE SPECIFIED			ORIGINATOR	R.SILVA	11-APR-2001
.XX	.XXX	ANGLES	DRAWN	W.CYKO	11-APR-2001
± .01	± .005	±1/2°	CHECKED	CNILA	08-JUL-2002
			APPROVED	R.SILVA	08-JUL-2002

1. BREAK ALL SHARP EDGES .015 MAX.
2. DO NOT SCALE DRAWING.
3. DIMENSIONS BASED UPON ASME Y14.5M-1994
4. MAX. ALL MACH. SURFACES 125
5. DRAWING UNITS: U.S. INCH

USED ON B D ME-363677 SHT. #2 MD-406110, MD-427772 C

MATERIAL A GM 111.3 NICKEL GRAPHALLOY GRAPHITE METALIZING CORP., YONKERS, NY

FERMI NATIONAL ACCELERATOR LABORATORY
UNITED STATES DEPARTMENT OF ENERGY

PPD/MECHANICAL DEPT.
MODULE ASSY.
SOLID BLOCK BUSHING

SCALE	DRAWING NUMBER	SHEET	REV
FULL	8875.111-MB-406067	1 OF 1	E

CREATED WITH : Ideas12NXSeries GROUP: ACCELERATOR MECH. SUPPT.

Created: 11:03:35 on 12-06-12 (D-M-Y) By: rstewart State: 1-INITIAL