REV	DESCRIPTION	DRAWN	DATE
		APPROVED	DATE

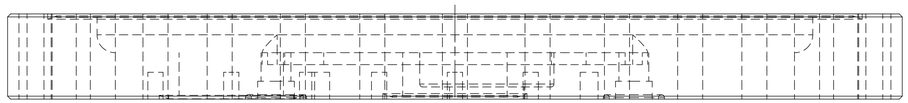

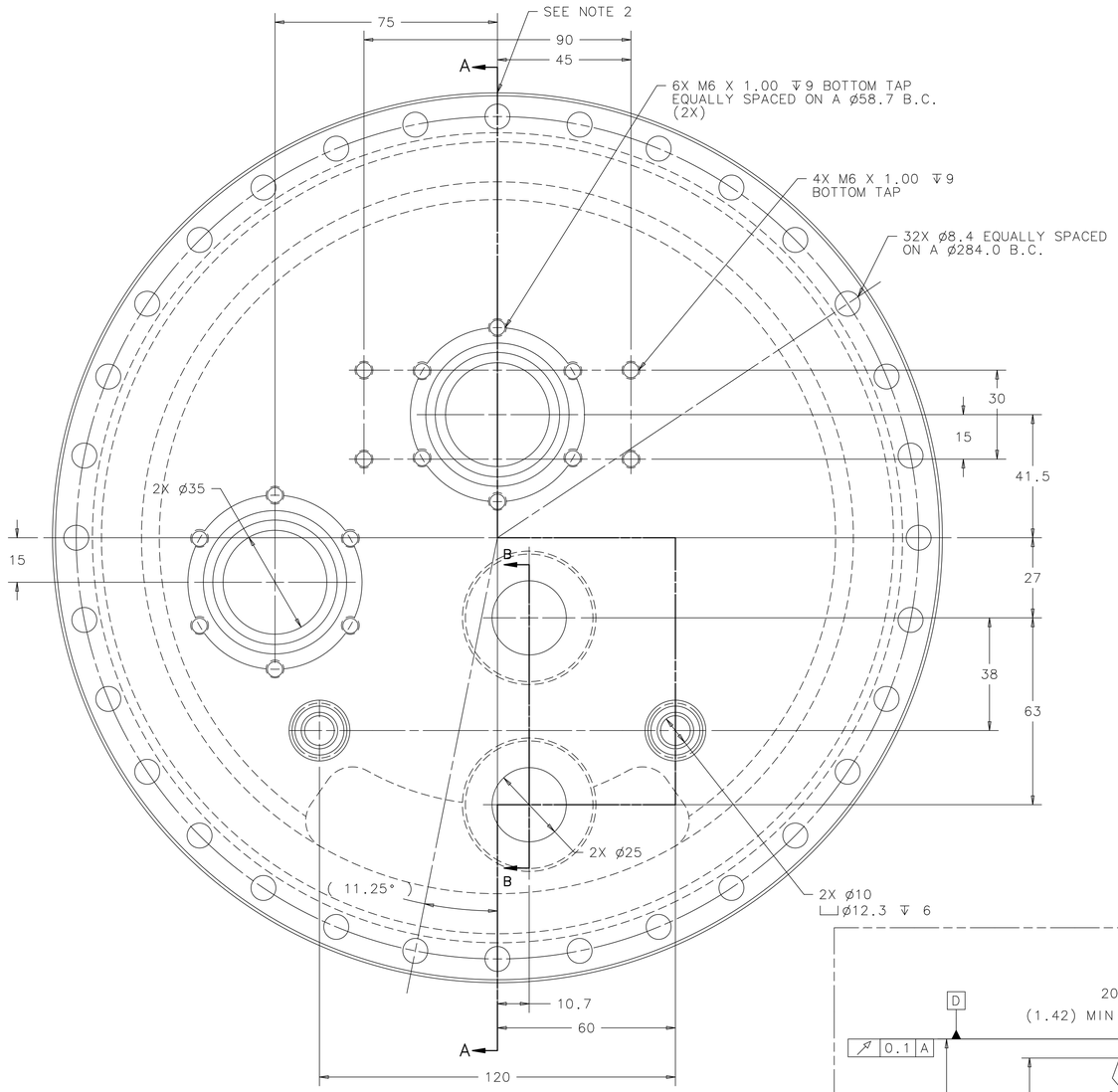

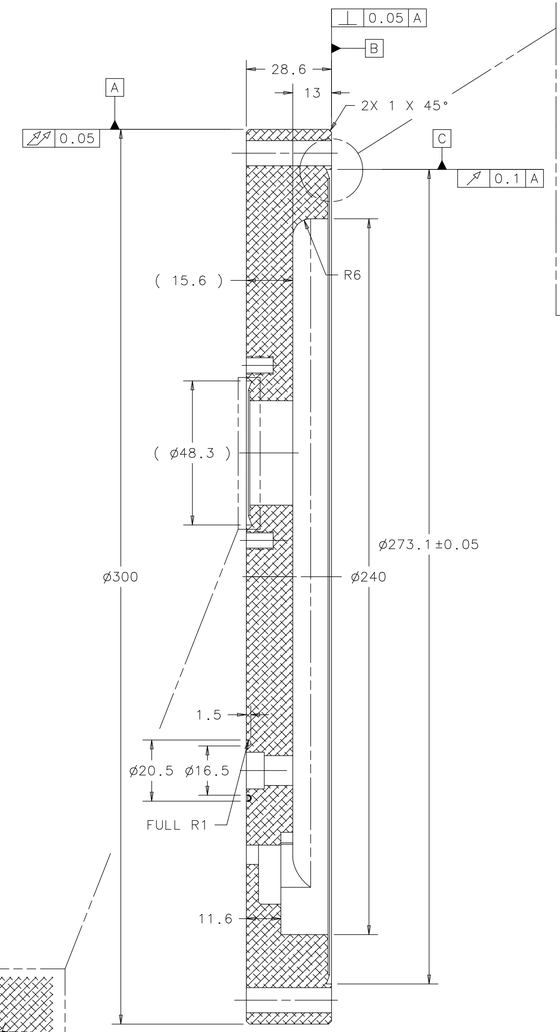

SECTION A-A
SCALE 1:1

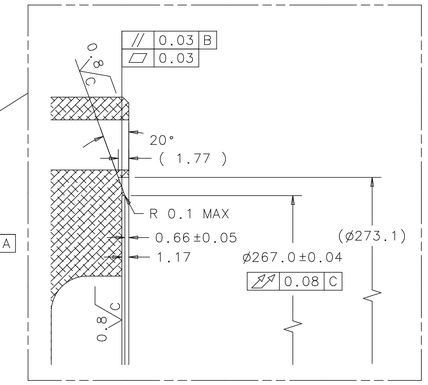

KNIFE EDGE DETAIL
SCALE 2:1

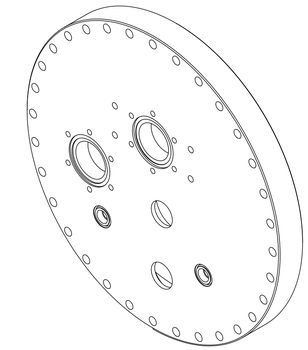

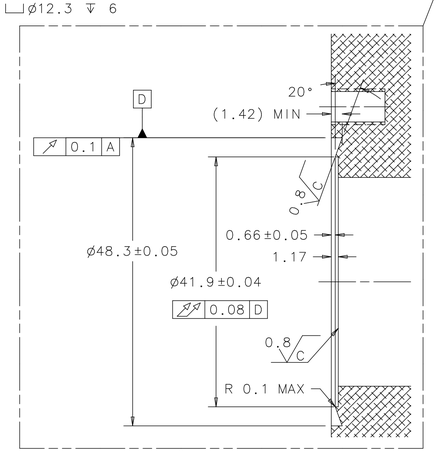

KNIFE EDGE DETAIL
SCALE 2:1

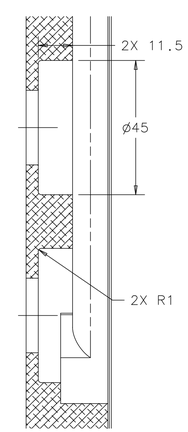

SECTION B-B
SCALE 1:1

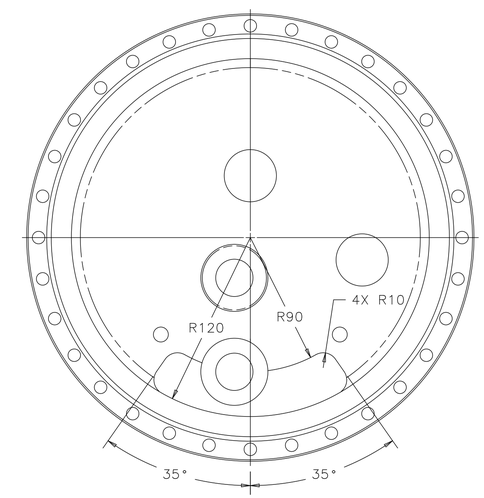

REAR VIEW
SCALE 1:2

NOTES: 1. VIBRO ETCH UPSTREAM ON OUTER SURFACE OF FLANGE
2. VIBRO ETCH 10MM LONG SCRIBE LINE ON THE OD SURFACE AT THE 90° POSITION
3. END WALL CAN BE MADE FROM NOR CAL PRODUCTS 12" O.D. (304.8MM) NONROTATABLE CF FLANGE

UNLESS OTHERWISE SPECIFIED			ORIGINATOR	M.MCGEE/P.HURH	18-AUG-2011
METRIC	X.X	ANGLES	DRAWN	R.STEWART	18-AUG-2011
± 0.25	± 0.1	± .5°	CHECKED	P.HURH	13-DEC-2011
1. BREAK ALL SHARP EDGES 0.4 MAX. 2. DO NOT SCALE DRAWING. 3. DIMENSIONS BASED UPON ASME Y14.5M-1994 4. MAX. ALL MACH. SURFACES 1.6 ✓ 5. DRAWING UNITS: METRIC			APPROVED	M.MCGEE	13-DEC-2011
			USED ON	ME-433792	
			MATERIAL	316L STAINLESS STEEL	

FERMI NATIONAL ACCELERATOR LABORATORY
UNITED STATES DEPARTMENT OF ENERGY

NOVA-ANU TARGET HALL MEDIUM ENERGY TARGET UPSTREAM END WALL

SCALE	DRAWING NUMBER	SHEET	REV
1:1	8875.112-MD-433793	1 OF 1	

CREATED WITH : Ideas12NXSeries GROUP: ACCELERATOR MECH. SUPPT.