REV	DESCRIPTION	DRAWN / APPROVED	DATE / DATE
A	Ø.530 THRU HOLE REMOVED	R.STEWART	04-NOV-2011
	NUMBER OF HOLES CHANGED	M.MCGEE	28-DEC-2011

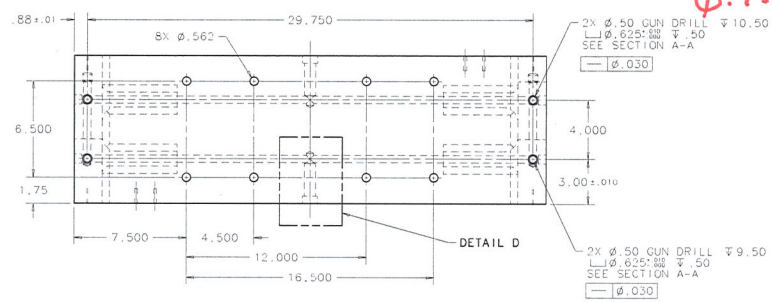

EXTEND Ø.75" BORE

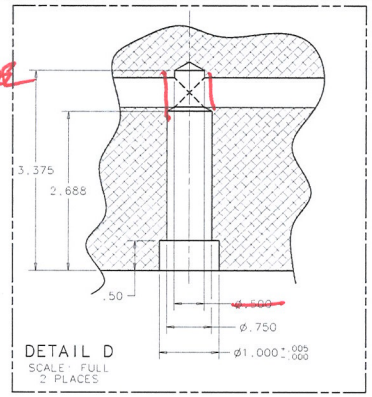

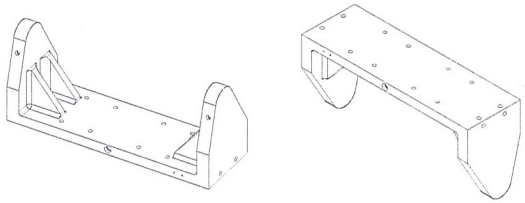

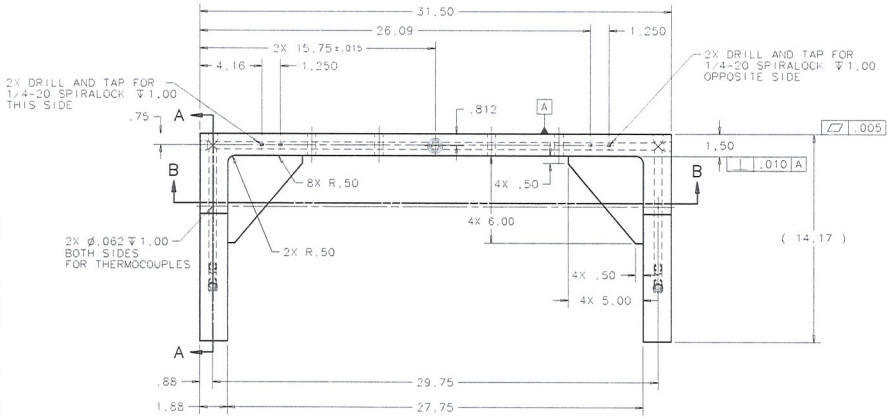

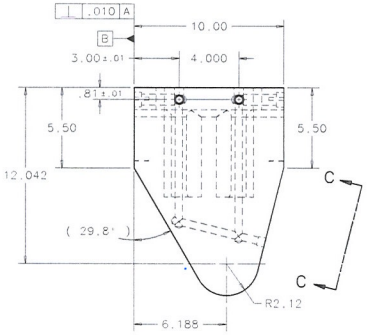

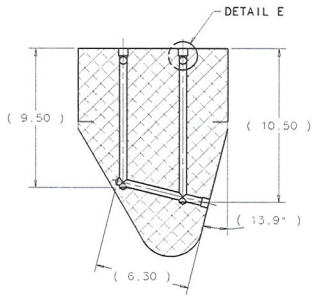

SECTION A-A

82°

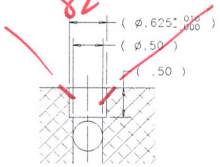

DETAIL E
SCALE: FULL
10 PLACES

NOTE: GUN DRILL FROM ONE END ONLY

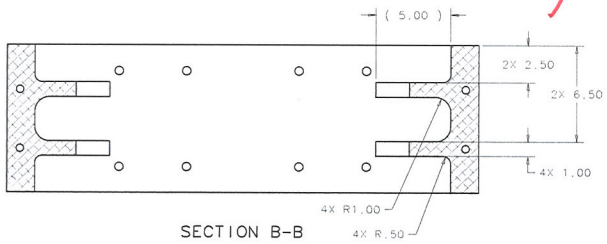

SECTION B-B

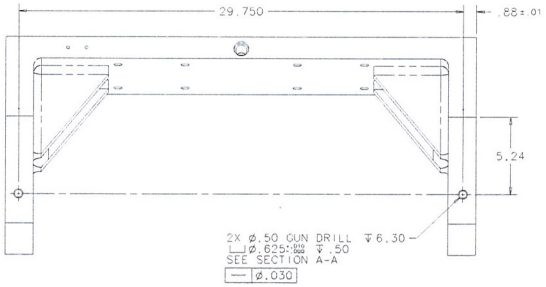

VIEW C-C

APPROXIMATE WEIGHT: 86 LBS

UNLESS OTHERWISE SPECIFIED			ORIGINATOR	M.MCGEE	11-MAR-2010
.XX	.XXX	ANGLES	DRAWN	D.HURD	23-SEP-2010
± .03	± .005	± 1°	CHECKED	M.MCGEE	14-OCT-2010
1. BREAK ALL SHARP EDGES .015 MAX. 2. DO NOT SCALE DRAWING. 3. DIMENSIONS BASED UPON ASME Y14.5M-1994. 4. MAX. ALL MACH. SURFACES 125 5. DRAWING UNITS: U.S. INCH			APPROVED	M.MARTENS	15-OCT-2010
			USED ON	MC-433575	
			MATERIAL	6061-T6 ALUMINUM	

FERMI NATIONAL ACCELERATOR LABORATORY
UNITED STATES DEPARTMENT OF ENERGY

NOVA-ANU TARGET HALL
MEDIUM ENERGY TARGET BAFFLE
D.S FRAME HANGER - PRE. MACHINE

SCALE	DRAWING NUMBER	SHEET	REV
1/4	8875.113-MD-433572	1 OF 1	A

CREATED WITH: Ideas12NXSeries GROUP: ACCELERATOR MECH. SUPPT.

Created: 13:26:45 on 30-03-12 (D-M-Y) By: rstewart State: 1-INITIAL