REV	DESCRIPTION	DRAWN	DATE
		APPROVED	DATE
A	INCREASED DIAMETER OF PIPE TO ø.75 FROM ø.50. UPDATED ITEMS 2 & 3 TO FIT.	DGH	15-NOV-2011
		C.CROWLEY	15-NOV-2011
B	CHANGED CERAMIC CONNECTORS FROM MALE TO FEMALE & DOUBLED QTY. ADDED ITEM #9	DGH	09-APR-2012
		M.MCGEE	09-APR-2012

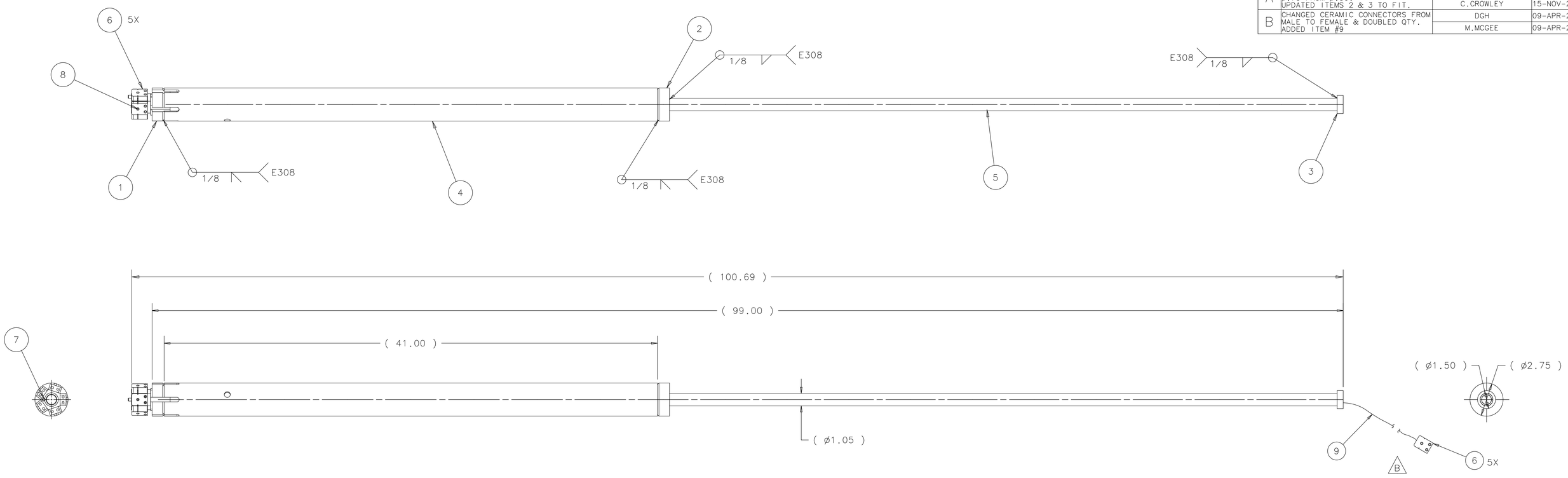

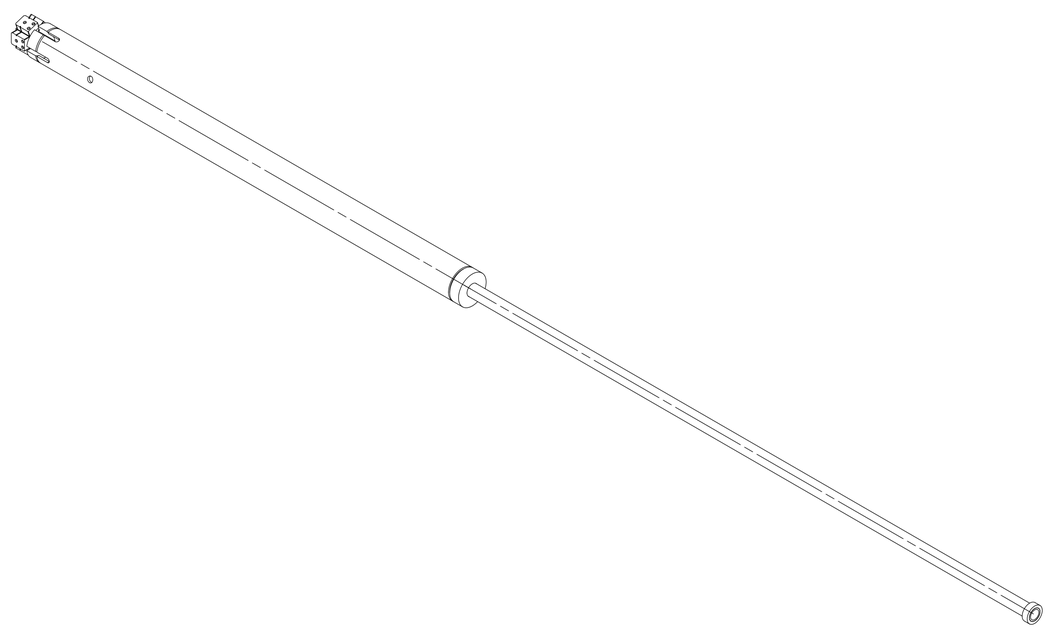

	ITEM	PART NO.	DESCRIPTION OR SIZE	QTY.
B	9	OMEGA 304-J-MO-062	THERMOCOUPLE WIRE W/ METAL SHEATH MAGNESIUM OXIDE INSULATION	AS REQ'D
	8		ROLL PIN - .047 X .38 LG. 304 SST.	5
	7		DOWEL PIN - 1/4 X 1.25 LG. 304 SST.	1
B	6	OMEGA NOX-J-F	CERAMIC CONNECTOR FEMALE	10
A	5		ø.75 PIPE SCH. 40 X 56.50 LG. 304 SST.	1
	4	MC-431491	CONNECTOR TUBE	1
A	3	MB-406877	TOP FLANGE	1
	2	MB-406876	ADAPTER FLANGE	1
	1	MC-406872	PENTAGON CONNECTORS MOUNT	1

PARTS LIST

UNLESS OTHERWISE SPECIFIED			ORIGINATOR	E.VILLEGAS	16-OCT-2003
.XX	.XXX	ANGLES	DRAWN	G.SMITH	16-OCT-2003
± ---	± ---	± ---	CHECKED	D.FRIEND	24-OCT-2003
			APPROVED	E.VILLEGAS	24-OCT-2003

1. BREAK ALL SHARP EDGES .015 MAX.
2. DO NOT SCALE DRAWING.
3. DIMENSIONS BASED UPON ASME Y14.5M-1994
4. MAX. ALL MACH. SURFACES
5. DRAWING UNITS: U.S. INCH

USED ON: ME-427998

MATERIAL: SEE PARTS LIST ABOVE

FERMI NATIONAL ACCELERATOR LABORATORY
UNITED STATES DEPARTMENT OF ENERGY

PPD/MECHANICAL DEPARTMENT
NUMI TARGET HALL TARGET BAFFLE
CONNECTOR SHAFT TGT-BAFFLE ASSY

SCALE	DRAWING NUMBER	SHEET	REV
1:4 & NOTED	8875.112-MD-431492	1 OF 1	B

CREATED WITH : Ideas12NXSeries | GROUP: ACCELERATOR MECH. SUPPT.