REV	DESCRIPTION	DRAWN	DATE
		APPROVED	DATE
A	ADDED ø.50 HOLE	G. WAVER	8/6/09
		K. ANDERSON	8/19/09

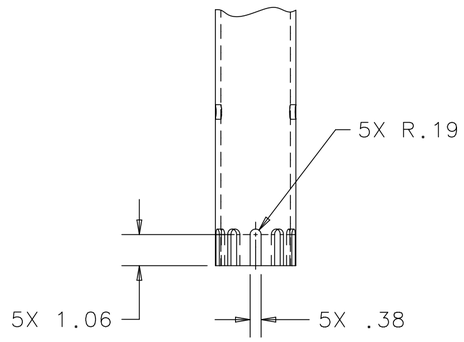

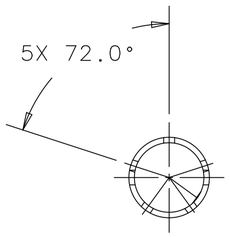

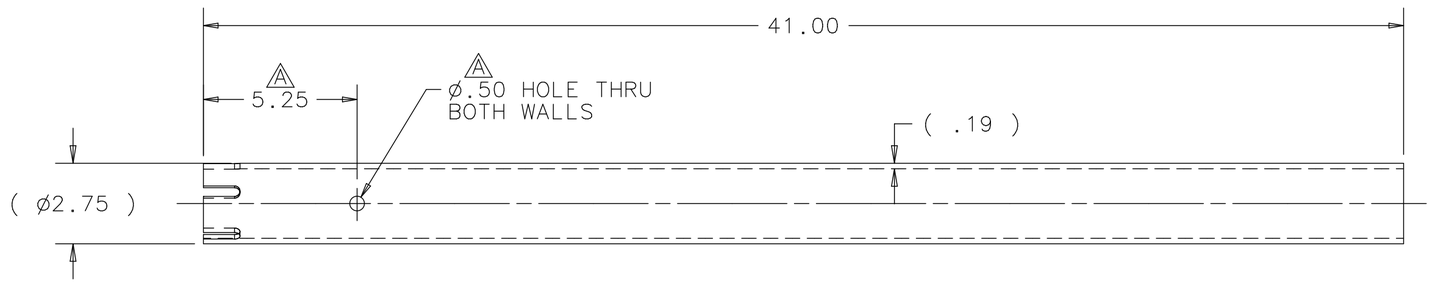

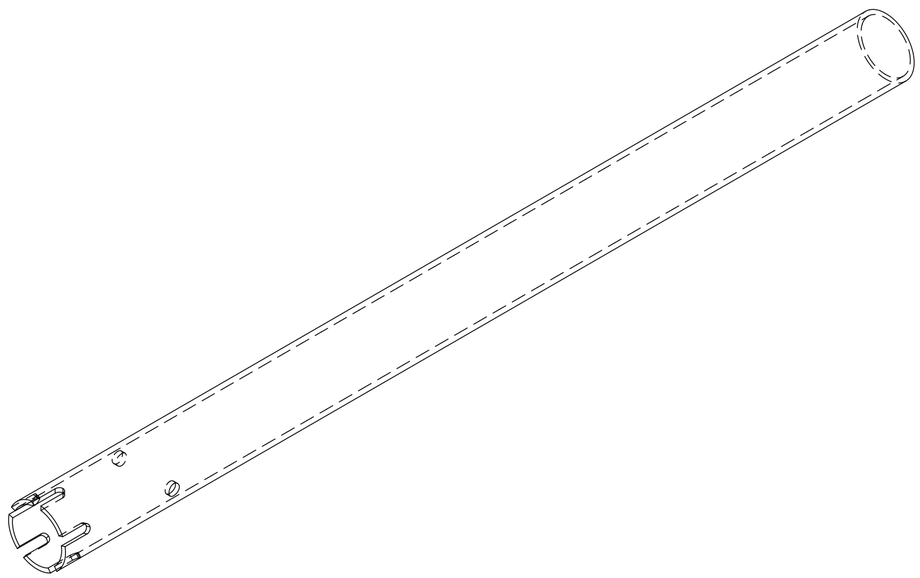

ITEM	PART NO.	DESCRIPTION OR SIZE	QTY.

PARTS LIST

UNLESS OTHERWISE SPECIFIED			ORIGINATOR	E.VILLEGAS	16-OCT-2003
.XX	.XXX	ANGLES	DRAWN	G.SMITH	16-OCT-2003
± .03	± ---	± .5°	CHECKED	D.FRIEND	24-OCT-2003
			APPROVED	E.VILLEGAS	24-OCT-2003

1. BREAK ALL SHARP EDGES .015 MAX.
2. DO NOT SCALE DRAWING.
3. DIMENSIONS BASED UPON ASME Y14.5M-1994
4. MAX. ALL MACH. SURFACES 125
5. DRAWING UNITS: U.S. INCH

USED ON: MD-431492

MATERIAL: STAINLESS TUBING-304 ø2.75 O.D. X .188 WALL

FERMI NATIONAL ACCELERATOR LABORATORY
UNITED STATES DEPARTMENT OF ENERGY

PPD/MECHANICAL DEPARTMENT
NUMI TARGET HALL TARGET BAFFLE
CONNECTOR TUBE

SCALE	DRAWING NUMBER	SHEET	REV
1;4	8875.112-MC-431491	1 OF 1	A

CREATED WITH : Ideas12NXSeries | GROUP: ACCELERATOR MECH. SUPPT.