REV	DESCRIPTION	DRAWN	DATE
		APPROVED	DATE
A	ADDED ø2.365 DIM; MOVED ø2.22 DIM.	G.WAVER	2/20/07
		K.ANDERSON	2/22/07
B	INCREASED BORE DIAMETER TO ACCEPT LARGER PIPE. UPDATED USED ON.	DGH	15-NOV-2011
		C.CROWLEY	15-NOV-2011

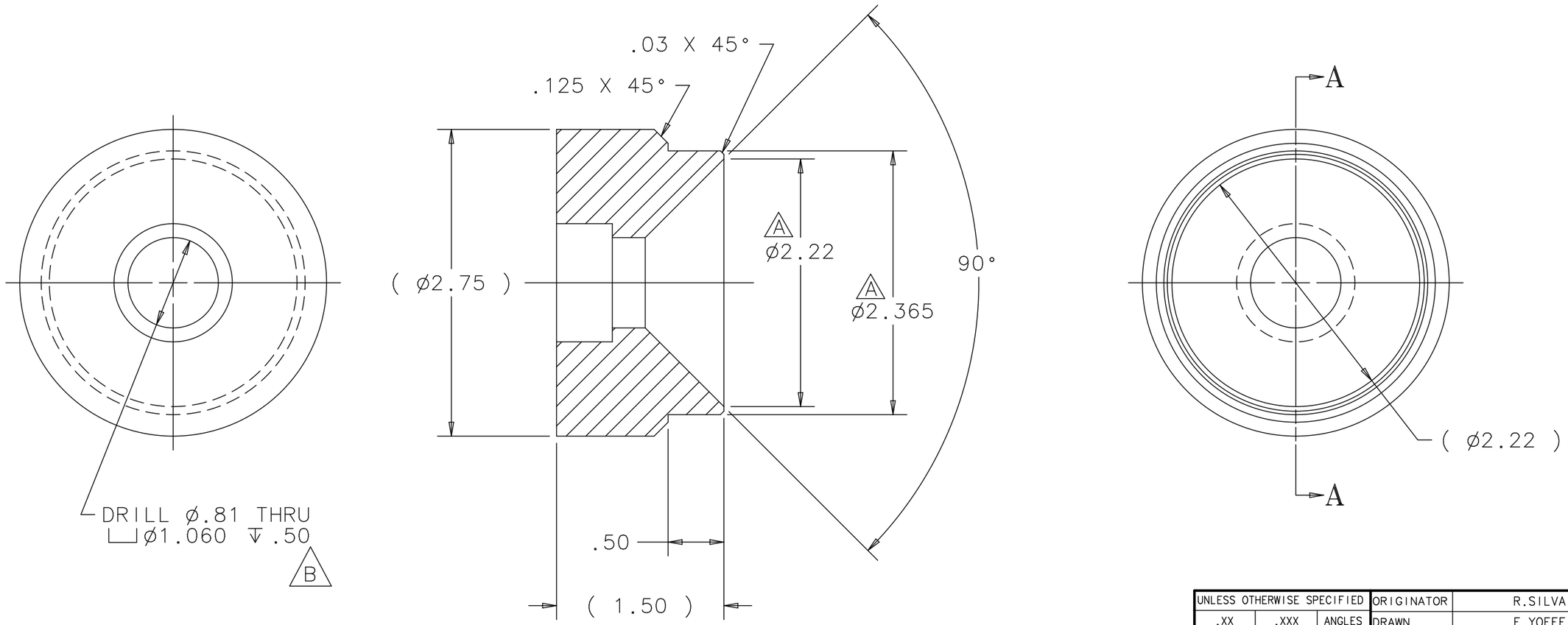

SECTION A-A

UNLESS OTHERWISE SPECIFIED			ORIGINATOR	R.SILVA	01-MAY-2002
.XX	.XXX	ANGLES	DRAWN	F.YOFFE	08-MAY-2002
± .01	± .005	± 1°	CHECKED	D.FRIEND	06-JUN-2002
			APPROVED	R.SILVA	06-JUN-2002

1. BREAK ALL SHARP EDGES .015 MAX.
2. DO NOT SCALE DRAWING.
3. DIMENSIONS BASED UPON ASME Y14.5M-1994
4. MAX. ALL MACH. SURFACES 125
5. DRAWING UNITS: U.S. INCH

USED ON
MD-406871
MD-427730 MD-431492
B

MATERIAL
STAINLESS ROUND 304, 2 3/4 X 1.50

FERMI NATIONAL ACCELERATOR LABORATORY
UNITED STATES DEPARTMENT OF ENERGY

PPD/MECHANICAL DEPT.
HORN1 ASSY.
ADAPTER FLANGE

SCALE	DRAWING NUMBER	SHEET	REV
FULL	8875.111-MB-406876	1 OF 1	B

CREATED WITH : Ideas12NXSeries GROUP: ACCELERATOR MECH. SUPPT.

Created: 09:59:22 on 21-05-12 (D-M-Y) By: rstewart State: 1-INITIAL