REV	DESCRIPTION	DRAWN	DATE
		APPROVED	DATE
A	ADD ø2.38	F.YOFFE	02-JUL-2003
		C.GROSIS	07-JUL-2003
B	ø2.365 WAS ø2.38	G. WAVER	9/10/04
		K. ANDERSON	9/13/04

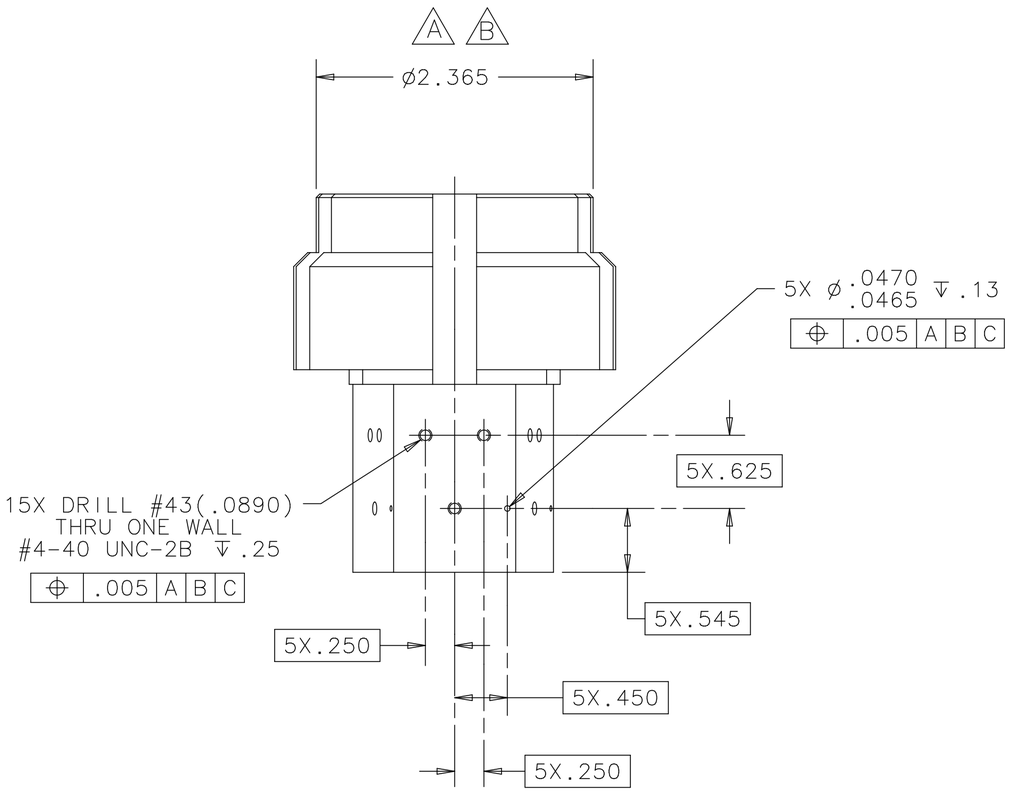

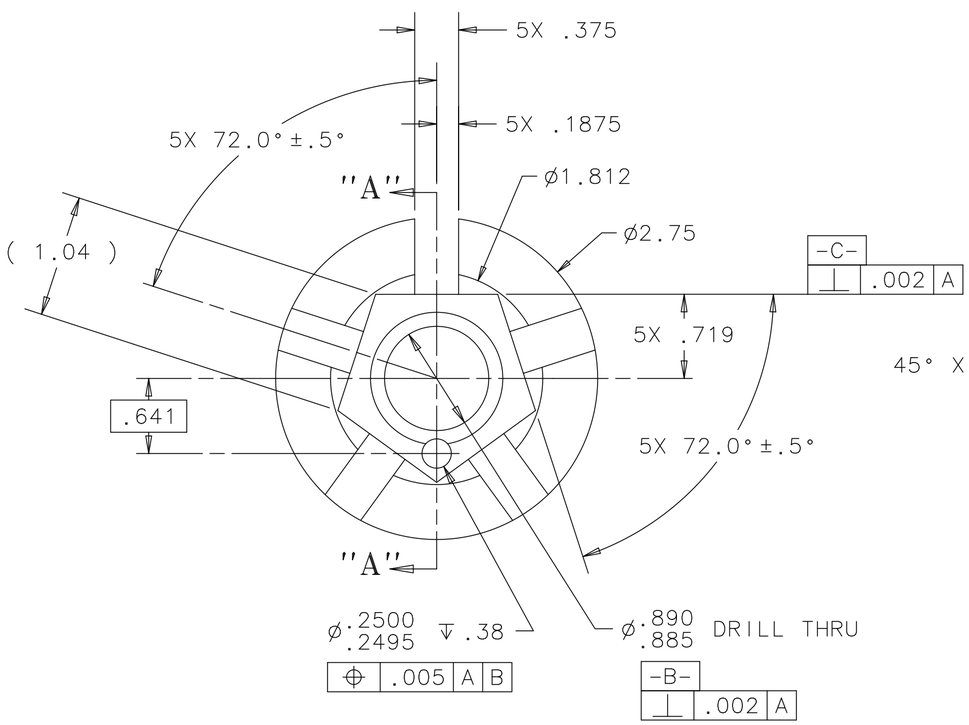

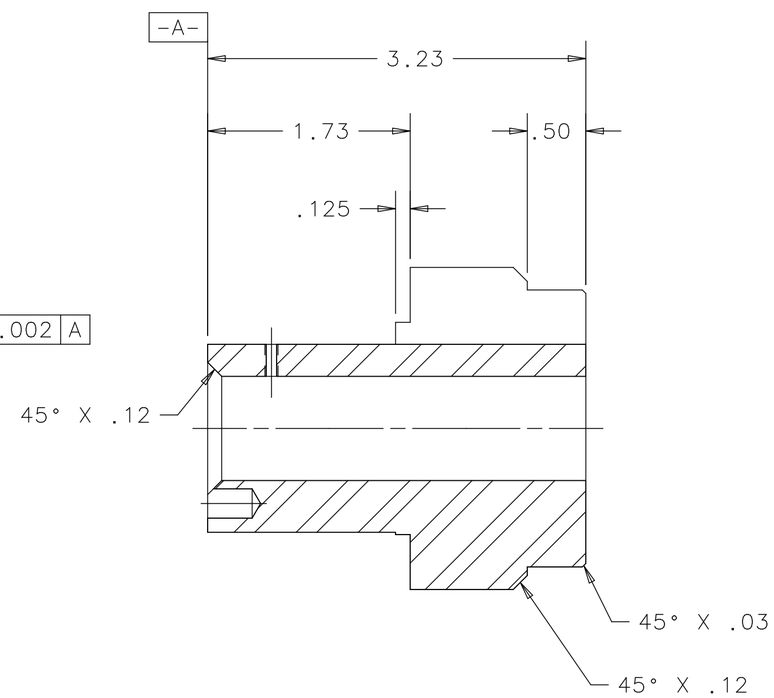

SECTION "A-A"

UNLESS OTHERWISE SPECIFIED			ORIGINATOR	R.SILVA	01-MAY-2002
.XX	.XXX	ANGLES	DRAWN	F.YOFFE	08-MAY-2002
± .01	± .005	± 1/2°	CHECKED	D.FRIEND	07-JUN-2002
			APPROVED	R.SILVA	07-JUN-2002

1. BREAK ALL SHARP EDGES .015 MAX.
2. DO NOT SCALE DRAWING.
3. DIMENSIONS BASED UPON ANSI Y14.5M-1982
4. MAX. ALL MACH. SURFACES 63
5. DRAWING UNITS: U.S. INCH

USED ON: MD-406871

MATERIAL: 304-SST

FERMI NATIONAL ACCELERATOR LABORATORY
UNITED STATES DEPARTMENT OF ENERGY

PPD/MECHANICAL DEPT.
HORN1 ASSY.
PENTAGON CONNECTORS MOUNT

SCALE	DRAWING NUMBER	SHEET	REV
FULL	8875.111-MC-406872	1 OF 1	C

CREATED WITH : Ideas12NXSeries | GROUP: TD/DDCIS-DESIGN-COMPUTING